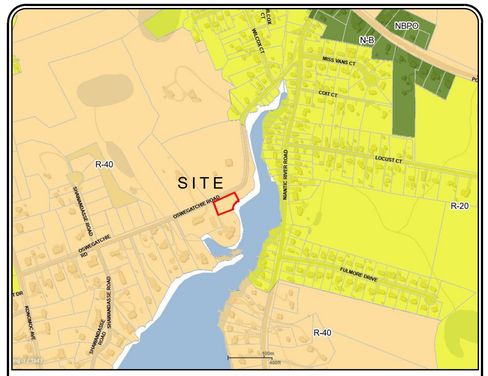

VICINITY MAP

NOT TO SCALE

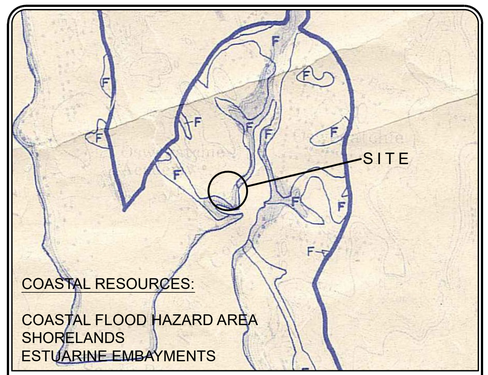

COASTAL RESOURCES MAP

NOT TO SCALE

ZONE R-40 ZONING COMPLIANCE CHART

	REQUIRED	PROVIDED
MINIMUM LOT AREA	40,000 SQ FT	22,500 SQ FT
MINIMUM FRONTAGE	100'	199.93'
MINIMUM WIDTH	125'	210±'
MAXIMUM COVERAGE	20%	5%
MINIMUM FRONT YARD	50'	50'
MINIMUM SIDE YARD	25'	41'
MINIMUM REAR YARD	50'	50
MAXIMUM HEIGHT	35'	LESS THAN 35'

ALL SETBACKS ARE MEASURED TO THE ROOF OVERHANG, CHIMNEY, CORNICE, OR OTHER SIMILAR ARCHITECTURAL FEATURE.

SOIL & EROSION CONTROL

1. CONSTRUCTION SEQUENCE FOR SOIL EROSION AND SEDIMENT CONTROLS:

A. INSTALL ALL TEMPORARY CONSTRUCTION ENTRANCES, SEDIMENT FENCES AND/OR HAY BALE BARRIERS AS SHOWN ON THIS PLAN.

B. CLEAR TREES, SHRUBS AND BRUSH IN AREAS WHERE GRADING WILL BE REQUIRED AND GRUB AREAS TO REMOVE ALL STUMPS, ROOTS, ETC. DISPOSE OF ALL MATERIAL CLEARED AND GRUBBED OFF SITE.

C. REMOVE AND STOCKPILE ALL TOPSOIL ON SITE AND PROVIDE A SEDIMENT FENCE ON THE DOWNSLOPE SIDE. SEED STOCKPILE WITH PERENNIAL RYEGRASS AT A RATE OF 40 POUNDS PER ACRE AND MULCH WITH HAY OR STRAW.

D. EXCAVATE AND/OR FILL WORK SITE TO SUBGRADE LEVEL. FILL WILL BE PLACED AND COMPACTED IN 8 INCH LIFTS AND SHALL BE FREE OF BRUSH, RUBBISH, LOGS, BUILDING DEBRIS, OR ANY OTHER OBJECTIONABLE MATERIAL. MOISTEN SOIL SURFACE PERIODICALLY WITH WATER TO MINIMIZE DUST.

E. CONSTRUCT BUILDINGS AND INSTALL UTILITIES. ADD EROSION CONTROL DEVICES AS NEEDED.

F. ALL DISTURBED AREAS NOT COVERED BY BUILDINGS AND DRIVEWAY SHALL BE GRADED AND STABILIZED AS FOLLOWS:

1. PLACE MINIMUM 4 INCHES OF TOPSOIL IN ALL AREAS. APPLY LIMESTONE AND FERTILIZER IN ACCORDANCE WITH SOIL TEST RECOMMENDATIONS.

2. APPLY RECOMMENDED SEED MIXTURE AT RECOMMENDED RATE.

3. APPLY STRAW OR HAY MULCH ON ALL SEEDED AREAS.

4. SEEDING SHOULD TAKE PLACE BETWEEN APRIL 1 AND JUNE 15 OR AUGUST 15 AND SEPTEMBER 30. IF OUTSIDE THESE PERIODS, AREAS SHALL BE STABILIZED WITH STRAW OR HAY MULCHING AT A RATE OF 90 POUNDS PER 1000 SQUARE FEET.

I. ALL GRADED AREAS WITH SLOPES STEEPER THAN 3 HORIZONTAL TO 1 VERTICAL SHALL BE STABILIZED WITH JUTE NETTING.

G. WHEN ALL GRADED AREAS ARE PERMANENTLY STABILIZED, REMOVE ALL EROSION AND SEDIMENT CONTROLS. REMOVE TRAPPED SEDIMENT.

H. IT SHALL BE THE RESPONSIBILITY OF THE APPLICANT TO ENSURE PROPER IMPLEMENTATION OF THE SOIL EROSION AND SEDIMENT CONTROLS AS SHOWN ON THIS PLAN; AND SHALL INCLUDE BUT NOT BE LIMITED TO, INSTALLATION AND MAINTENANCE OF CONTROL MEASURES, INFORMING ALL PARTIES OF SUCH REQUIREMENTS AND NOTIFICATION OF ANY TRANSFER OF THIS RESPONSIBILITY TO OTHER PARTIES.

I. RECOMMENDED SEED MIXTURE: FUTURA 2000 BY THE CHAS C. HART CO. CONTAINING THE FOLLOWING VARIETIES OF PERENNIAL RYEGRASSES: FIESTA II, BLAZER II, DASHER II AND EXPRESS. A SEEDING RATE OF 5 – 7 LBS PER 1000 SF IS RECOMMENDED.

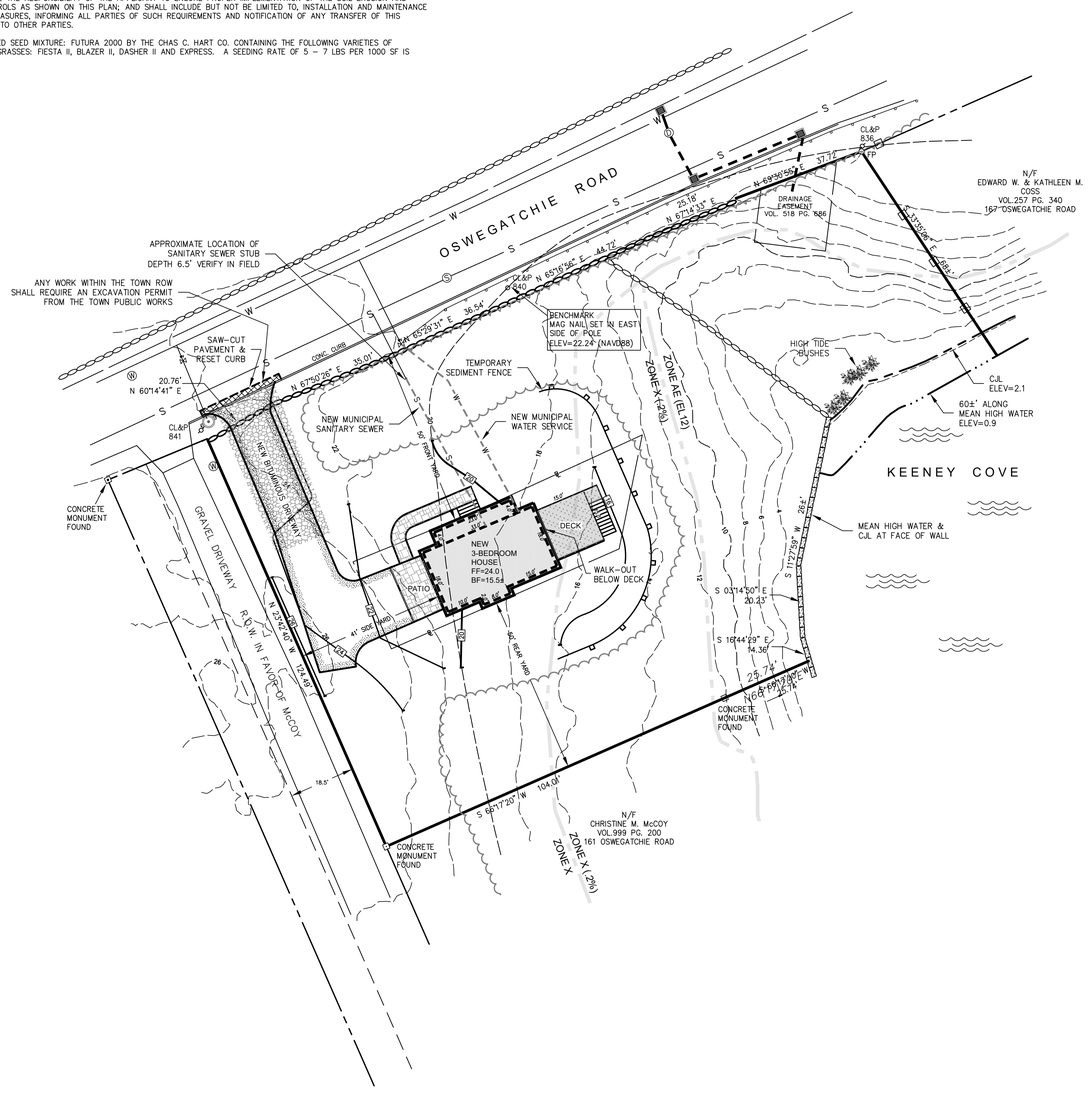

GRAPHIC SCALE

20 0 10 20 40 80

(IN FEET)
1 inch = 20 ft.

AREA= 22,500 SQ FT M/L
0.52 ACRES M/L

NOTES:

1. THIS PLAN AND THE SURVEY IT IS BASED ON HAVE BEEN PREPARED IN ACCORDANCE WITH THE REGULATIONS OF CONNECTICUT STATE AGENCIES, SECTIONS 20–300B MINIMUM STANDARDS OF ACCURACY, CONTENT AND CERTIFICATION FOR SURVEYS AND MAPS. THE TYPE OF SURVEY IS A ZONING LOCATION SURVEY. CONFORMING TO TOPOGRAPHIC CLASS T–2 AND THE VERTICAL ACCURACY CONFORMS TO CLASS V–2. THIS IS NOT A PROPERTY SURVEY OR BOUNDARY SURVEY AND ANY PROPERTY LINES DEPICTED DO NOT REPRESENT THIS SURVEYOR'S PROPERTY/BOUNDARY OPINION. BOUNDARY INFORMATION IS TAKEN FORM THE A–2 SURVEY MAP REFERENCED BELOW.

   NO DECLARATION IS EXPRESSED OR IMPLIED BY THIS MAP OR COPIES THEREOF UNLESS THE PRINT BEARS THE IMPRESSION TYPE SEAL AND ORIGINAL LIVE SIGNATURE OF THE SURVEYOR WHOSE NAME AND REGISTRATION NUMBER APPEAR BELOW OR THEREON.

2. REFERENCE IS MADE TO WATERFORD LAND EVIDENCE RECORDS VOLUME 175 AT PAGE 029 FOR A QUIT CLAIM DEED DATED SEPTEMBER 25, 1968 REGARDING RECORD TITLE TO THE SUBJECT PROPERTY.

3. THE PROPERTY SHOWN HEREON IS SUBJECT TO, OR MAY BE BENEFITED BY THE FOLLOWING:

   SEE VOLUME 518 AT PAGE 684 FOR A DRAINAGE EASEMENT CONVEYED TO THE TOWN OF WATERFORD DATED NOVEMBER 17, 2000.

4. THE SUBJECT PROPERTY IS LOCATED ENTIRELY WITHIN THE R–40 ZONE DISTRICT. THIS PROPERTY IS ALSO WITHIN THE COASTAL AREA MANAGEMENT AREA.

5. BY GRAPHICAL DEPICTION ONLY, THIS PARCEL LIES WITHIN FLOOD HAZARD ZONES AE (EL12), X (0.2%) AND X AS SHOWN ON "NATIONAL FLOOD INSURANCE PROGRAM FLOOD INSURANCE RATE MAP NEW LONDON COUNTY, CONNECTICUT, COMMUNITY: TOWN OF WATERFORD 090107 MAP NUMBER: 09011C0481J MAP EFFECTIVE: 8–5–2013, FEDERAL EMERGENCY MANAGEMENT AGENCY".

6. THE SUBJECT PROPERTY IS SHOWN ON THE TOWN OF WATERFORD TAX ASSESSOR MAP 115 AS LOT 5938 AND HAS AN ASSIGNED STREET ADDRESS OF 163 OSWEGATCHIE ROAD.

7. BEARINGS AND COORDINATES NOTED HEREON ARE REFERENCED TO THE CONNECTICUT STATE PLANE COORDINATE SYSTEM (NAD 83) BASED ON TOWN OF WATERFORD SURVEY STATIONS AS SHOWN ON THE A–2 SURVEY MAP REFERENCED BELOW. ELEVATIONS DEPICTED HEREON ARE REFERENCED TO THE NORTH AMERICAN VERTICAL DATUM OF 1988 (NAVD88) TRANSFORMED FROM ELLIPSOID HEIGHT TO ORTHOMETRIC HEIGHT UTILIZING NGS2018 GEOID. AS DETERMINED BY GLOBAL POSITIONING SYSTEM (GPS) OBSERVATIONS UTILIZING THE SUPER GNSS REFERENCE NETWORK STATION HAVING THE FOLLOWING VALUES:

   LATITUDE = N41.303892794700°
   LONGITUDE = W72.050613875218°
   ELLIPSOID HEIGHT = –10.7997 METERS

8. THIS PLAN REPRESENTS THE LOCATION OF THE BOUNDS AND SITE CONDITIONS DETERMINED BY FIELD SURVEY ON FEBRUARY 7, 2025 RECORD TITLE AND ADJOINER INFORMATION WAS OBTAINED FROM TAX ASSESSOR AND LAND EVIDENCE RECORDS ON FEBRUARY 10, 2025.

9. UNDERGROUND UTILITY, STRUCTURE AND FACILITY LOCATIONS DEPICTED AND NOTED HEREON HAVE BEEN COMPILED, IN PART, FROM RECORD MAPPING SUPPLIED BY THE RESPECTIVE UTILITY COMPANIES OR GOVERNMENTAL AGENCIES, FROM PAROLE TESTIMONY AND FROM OTHER SOURCES. THESE LOCATIONS MUST BE CONSIDERED AS APPROXIMATE IN NATURE. ADDITIONALLY, OTHER SUCH FEATURES MAY EXIST ON THE SITE, THE EXISTENCE OF WHICH ARE UNKNOWN TO JAMES BERNARDO LAND SURVEYING, LLC. THE SIZE, LOCATION AND EXISTENCE OF ALL SUCH FEATURES MUST BE FIELD DETERMINED AND VERIFIED BY THE APPROPRIATE AUTHORITIES PRIOR TO CONSTRUCTION. CALL BEFORE YOU DIG 1–800–922–4455.

10. TIDAL ELEVATIONS ARE AS FOLLOWS BASED ON THE TIDAL EPOCH 83–01

    CJL: 2.1 FEET
    MHW: 0.9 FEET
    NAVD88: 0.0 FEET
    MLW: –1.6 FEET

MAP REFERENCE:

PROPERTY SURVEY PREPARED FOR PETER W. VAN ARNAM LOCATION: 163 OSWEGATCHIE ROAD, WATERFORD, CONNECTICUT SHEET NUMBER 1 OF 1 SCALE: 1"=20' DATE: NOVEMBER 10, 2021 REVISED 11/22/2021 BY J. ROBERT PFANNER & ASSOCIATES P.C.

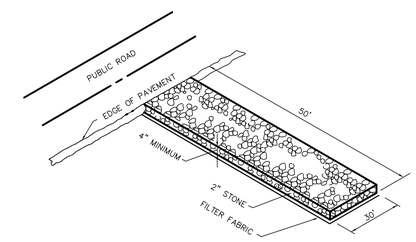

TEMPORARY CONSTRUCTION ENTRANCE

NOT TO SCALE

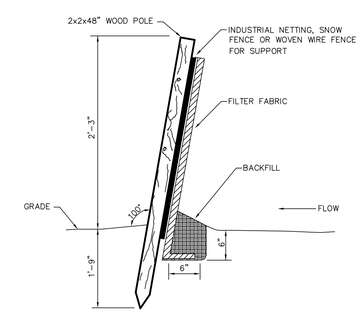

NOTE: PREMANUFACTURED FENCE MAY BE USED.

SEDIMENT FENCE

NOT TO SCALE

LEGEND

THE FOLLOWING SYMBOLS/ABBREVIATIONS MAY APPEAR ON THIS DRAWING

AC	ACRES	THB	SOIL DEEP TEST LOCATION
BF	BASEMENT FLOOR		WELL
BIT	BITUMINOUS		HYDRANT
BCLC	BITUMINOUS CONCRETE LIP CURBING		BUSH
CONC	CONCRETE		DECIDUOS TREE
DIA	DIAMETER		CONIFERUS TREE
DB	DISTRIBUTION BOX		BUILDING SETBACK LINE
EOP	EDGE OF PAVEMENT		CLEARING LIMIT LINE
ELEV	ELEVATION		EXISTING TREELINE
FF	FINISHED FIRST FLOOR	158	EXISTING CONTOUR
LF	LINEAR FOOT	158	NEW CONTOUR
(MIN)	MINIMUM		SEDIMENT FENCE
M/L	MORE OR LESS		STORM DRAIN PIPE
N/F	NOW OR FORMERLY		STONE WALL
PVC	POLY VINYL CHLORIDE	S	SANITARY SEWER
SCH40	SCHEDULE 40	W	WATER
5.4x	SPOT ELEVATION		
SF	SQUARE FEET		
TR	TO REMAIN		
HTB	HIGH TIDE BUSH		
SP	SPARTINA PATENS		
SA	SPARTINA ALTERNAFLORA		
TBR	TO BE REMOVED		
TH	THRESHOLD ELEVATION		
TYP	TYPICAL		
TW	TOP OF WALL ELEVATION		
VF	VERIFY IN FIELD		
P–5	SOIL PERC TEST LOCATION		

STATE OF CONNECTICUT James Bernardo No. 70121 LICENSED LAND SURVEYOR

TO THE BEST OF MY KNOWLEDGE AND BELIEF THIS MAP IS SUBSTANTIALLY CORRECT AS NOTED HEREON.

James Bernardo 2–24–2025
JAMES BERNARDO LICENSE #70121 DATE

JAMES BERNARDO
LAND SURVEYING, LLC
102A SPITHEAD ROAD
WATERFORD, CONNECTICUT 06385
(860) 447-0236
WWW.JBSURVEY.COM

JAMES BERNARDO LAND SURVEYING LLC

NOTICE: THESE DOCUMENTS ARE PROTECTED BY COPYRIGHT ©2025. THESE DRAWINGS OR ANY INFORMATION HAVE NOT BEEN SHALL NOT BE DUPLICATED IN PART OR WHOLE FOR ANY OTHER PROJECT, LOCATION, SITE OR OWNER WITHOUT THE WRITTEN PERMISSION OF THE SURVEYOR. THESE DRAWINGS SHALL REMAIN THE PROPERTY OF THE SURVEYOR.

LTR	DESCRIPTION	DATE

REVISIONS

ZONING LOCATION SURVE - COASTAL SITE PLAN

PREPRED FOR

JAMES G. GERRISH

FOR PROPERTY LOCATED AT

163 OSWEGATCHIE ROAD

TOWN OF WATERFORD - COUNTY OF NEW LONDON - CONNECTICUT

Sheet No.
S-01
SHEET 1 OF 1

Scale: 1" =20'

Date FEBRUARY 7, 2025

Project No. 25002–1