ROBERTS VILLAGE DRIVE
CGS § 8-30g AFFORDABLE HOUSING
SITE DEVELOPMENT PLANS
FOR CONSERVATION COMMISSION REVIEW

PREPARED FOR 1721, LLC
430 MOHEGAN AVENUE PARKWAY & 23B OLD NORWICH ROAD
TAX MAP 76 LOTS 10164 & 5600
WATERFORD, CONNECTICUT

NOT FOR CONSTRUCTION
UNTIL THIS NOTE IS REMOVED

ORIGINAL PLAN SET DATED 5/21/2024

#	DATE	DESCRIPTION	BY
2	7/23/2024	REVISIONS PER TOWN COMMENTS, MISC.	RG
1	7/17/2024	REVISIONS PER TOWN COMMENTS, MISC.	RG

DRAWING INDEX:

TITLE	DWG. NO.	SHEET NO.
SITE DEVELOPMENT PLAN	SDP-1	1 OF 13
GRADING PLAN	GP-1	2 OF 13
EROSION & SEDIMENTATION CONTROL PLAN	ECS-1	3 OF 13
UTILITY PLAN	UP-1	4 OF 13
SANITARY SEWER & STORM SEWER SYSTEM PLAN	SSS-1	5 OF 13
ROADWAY ALIGNMENT PLAN & PROFILE (STA. 0+00 TO 4+50)	RAP-1	6 OF 13
ROADWAY ALIGNMENT PLAN & PROFILE (STA. 4+50 TO 9+50)	RAP-2	7 OF 13
CONSTRUCTION DETAILS (STORMWATER AND E&S CONTROL)	CD-1	8 OF 13
CONSTRUCTION DETAILS (STORMWATER AND E&S CONTROL)	CD-2	9 OF 13
CONSTRUCTION DETAILS (STORMWATER AND E&S CONTROL)	CD-3	10 OF 13
CONSTRUCTION DETAILS (ROADWAY & UTILITIES)	CD-4	11 OF 13
CONSTRUCTION DETAILS (SANITARY SEWER SYSTEM)	CD-5	12 OF 13
CONSTRUCTION DETAILS (SANITARY SEWER SYSTEM)	CD-6	13 OF 13

PLAN REFERENCES:

1. THIS PLAN WAS COMPILED USING THE FOLLOWING REFERENCE INFORMATION:

A) A CLASS A–2 SURVEY MAP ENTITLED "BOUNDARY LINE ADJUSTMENT PLAN, PREPARED FOR 1721, LLC, #430 MOHEGAN AVENUE PARKWAY (CONN. RTE #32) & ROBERTS COURT, WATERFORD, CONNECTICUT", SCALE: 1"=40', DATED: JULY 3, 2023, PREPARED BY: ADVANCED SURVEYS, LLC.

B) A SITE PLAN ENTITLED "PHASE 1 – SITE LAYOUT CONCEPT #2, PROPOSED HOUSE OF WORSHIP, PREPARED FOR OWNER / APPLICANT: SHORELINE COMMUNITY BIBLE CHURCH, FOR PROPERTY LOCATED AT M76 B10164, ZONE R–20, 430 MOHEGAN AVE. PARKWAY (CT ROUTE 32) – M76 B10164, TOWN OF WATERFORD – NEW LONDON COUNTY – CONNECTICUT", SCALE: 1"=40', DATED: JULY 2022 WITH REVISIONS THROUGH OCTOBER 18, 2022, PREPARED BY: EDWARD H. WENKE III, PE.

C) A SURVEY MAP ENTITLED "EXISTING SITE CONDITIONS PLAN, SINGLE–FAMILY RESIDENTIAL RE–SUBDIVISION, PREPARED FOR OWNER / APPLICANT: 1721, LLC, FOR PROPERTY LOCATED AT M76 B10164, ZONE R–20, 430 MOHEGAN AVE. PARKWAY (CT ROUTE 32) – M76 B10164, TOWN OF WATERFORD – NEW LONDON COUNTY – CONNECTICUT", SCALE: 1"=40', DATED: NOVEMBER 2021 WITH REVISIONS THROUGH NOVEMBER 10, 2021, PREPARED BY: EDWARD H. WENKE III, PE.

D) A SITE PLAN AND PROFILE ENTITLED "CONSTRUCTION CONTRACT 15, QUAKER HILL LATERAL SEWERS, PLAN AND PROFILE, SEKONK DRIVE", DATED: JANUARY 1980, PREPARED BY: HAYDEN, HARDING & BUCHANAN, INC.

E) A SITE PLAN AND PROFILE ENTITLED "CONSTRUCTION CONTRACT 15, QUAKER HILL LATERAL SEWERS, PLAN AND PROFILE, ROBERTS COURT, EASEMENT, MOHEGAN PARKWAY", DATED: DECEMBER 1979 WITH REVISIONS THROUGH AUGUST 12, 1980, PREPARED BY: HAYDEN, HARDING & BUCHANAN, INC.

F) A SITE PLAN AND PROFILE ENTITLED "CONSTRUCTION CONTRACT 15, QUAKER HILL LATERAL SEWERS, PLAN AND PROFILE, ROBERTS COURT", DATED: DECEMBER 1979, PREPARED BY: HAYDEN, HARDING & BUCHANAN, INC.

GENERAL NOTES:

1. THE PROPERTY OWNER AND APPLICANT IS 1721, LLC OF 49 TWIN LAKES DRIVE, WATERFORD, CT 06385.
2. THE SUBJECT PARCELS ARE IDENTIFIED AS LOT 10164 ON TAX ASSESSOR'S MAP 76 (#430 MOHEGAN AVENUE PARKWAY) AND LOT 5600 ON TAX ASSESSOR'S MAP 76 (#23B OLD NORWICH ROAD). THE DEED REFERENCES OF THE PROPERTIES ARE VOLUME 1612 PAGE 244 AND VOLUME 1645 PAGE 97, RESPECTIVELY. THE EXISTING AREAS OF THE PARCELS ARE 223,149± S.F. (5.12± ACRES) AND 25,820± S.F. (0.59± ACRES), RESPECTIVELY.
3. THE SUBJECT PROPERTY IS LOCATED WITHIN THE MEDIUM DENSITY RESIDENTIAL 'R–20' ZONING DISTRICT.
4. THE APPLICANT IS PROPOSING TO EXTEND ROBERTS COURT INTO THE SITE AND CREATE A 20' WIDE PRIVATE LOOPED ROAD WITH 20 RESIDENTIAL BUILDINGS (16 SINGLE–FAMILY HOUSES AND 4 DUPLEXES FOR A TOTAL OF 24 DWELLING UNITS), INSTALL A SANITARY SEWER SYSTEM, A STORM SEWER SYSTEM, STORMWATER MANAGEMENT AREAS AND OTHER UTILITIES, LANDSCAPING, SITE LIGHTING AND OTHER ASSOCIATED IMPROVEMENTS.
5. THIS PROJECT IS AN AFFORDABLE HOUSING DEVELOPMENT AND FALLS UNDER CONNECTICUT GENERAL STATUES 8–30g.
6. THIS PROPERTY WILL BE SERVED BY PRIVATE WATER AND PRIVATE SEWER.
7. REFER TO ARCHITECTURAL DRAWINGS FOR ADDITIONAL PROPOSED BUILDING INFORMATION.
8. ALL ELEVATIONS AND CONTOURS SHOWN HEREON ARE REFERENCED TO THE NGVD–29 DATUM PER PROJECT LAND SURVEYOR AND ARE TIED INTO THE TOWN OF WATERFORD MONUMENT SYSTEM.

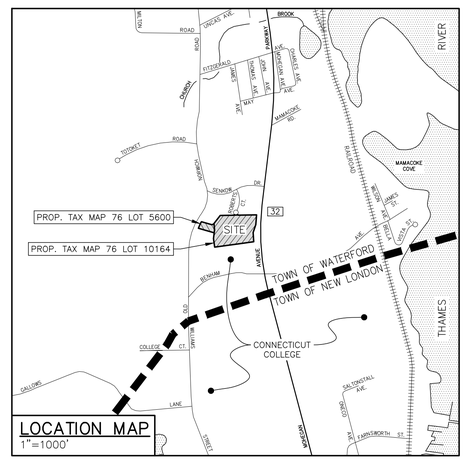

LOCATION MAP
1"=1000'

LEGEND

	EXISTING PROPERTY/STREET LINE
	EXISTING EASEMENT LINE
	PROPOSED EASEMENT LINE
	BUILDING SETBACK LINE
	EXISTING BUILDING (TO BE REMOVED)
	PROPOSED BUILDING
	EXISTING STONEWALL
	PROPOSED STONEWALL
	EXISTING FENCE LINE
	PROPOSED FENCE LINE
	EXISTING TREELINE
	PROPOSED TREELINE
	INLAND WETLAND AREA
	100' UPLAND REVIEW AREA
130	EXISTING CONTOUR
130	PROPOSED CONTOUR
SB	PROPOSED SILT BARRIER
SF	PROPOSED SILT FENCE
S	EXISTING SANITARY LINE
S	PROPOSED SANITARY LINE
G	EXISTING GAS LINE
G	PROPOSED GAS LINE
W	EXISTING WATER LINE
W	PROPOSED WATER LINE
OHW	EXISTING OVERHEAD WIRES
PE	PROPOSED PRIMARY ELECTRIC SERVICE IN SCH. 40 CONDUIT PER CUSTODIAL UTILITY COMPANY SPEC
D	EXISTING DRAINAGE LINE
	PROPOSED DRAINAGE LINE
TP#101	TEST PIT LOCATION
TP#102	TEST PIT W/ PERMEABILITY LOCATION
	PROPOSED DRAINAGE MANHOLE
	EXISTING SANITARY SEWER MANHOLE
	PROPOSED SANITARY SEWER MANHOLE
	PROPOSED WATER VALVE
	PROPOSED WATER HYDRANT
	PROPOSED CATCH BASIN
	UTILITY POLE
	PROPOSED MONUMENT
	PROPERTY CORNER/DRILL HOLE
130.8	PROPOSED SPOT GRADE
G.T.D.	PROPOSED GRADE TO DRAIN
	PROPOSED RIPRAP AREA
	EXISTING BOULDERS
	PROPOSED LIGHT POLE

LAND SURVEYOR

ADVANCED SURVEYORS, LLC
RICHARD A. DESCHAMPS, L.S.
136 DUNHAM STREET
NORWICH, CT 06360

CIVIL ENGINEER

INDIGO LAND DESIGN, LLC
JOE WREN, P.E.
40 ELM STREET, 2ND FLOOR
OLD SAYBROOK, CT 06475

PROPERTY OWNER/APPLICANT

1721, LLC
49 TWIN LAKES DRIVE
WATERFORD, CT 06385

PLAN PREPARED BY:
INDIGO LAND DESIGN, LLC
JOSEPH WREN, P.E.
CT REG. NO. 21090
40 ELM STREET, 2ND FLOOR
OLD SAYBROOK, CT 06475
PHONE: (860) 388-9343
WEB: INDIGO-LAND.COM

NOT FOR CONSTRUCTION UNTIL THIS NOTE IS REMOVED

#	DATE	DESCRIPTION	BY
2	7/23/2024	REVISIONS PER TOWN COMMENTS, MISC.	RG
1	7/11/2024	REVISIONS PER TOWN COMMENTS, MISC.	RG

SITE DEVELOPMENT PLAN

PREPARED FOR 1721, LLC
430 MOHEGAN AVENUE PARKWAY & 23B OLD NORWICH ROAD
TAX MAP 76 LOTS 10164 & 5600
WATERFORD, CONNECTICUT

DATE: MAY 21, 2024
SCALE: 1"=30'
DRAWN BY: CO, MA, RG, RM
CHECKED BY: JW
DWG. NO.: SDP-1
SHEET NO.: 1 of 13
JOB. NO.: 2023-922

DEEP TEST PIT DATA

DATE: 7/13/2023
WITNESSED BY: JOE WREN, P.E., MEG ALLEN, ROSS GLADSTONE, P.E., RAY MALINOWSKI & CAROLINE O'HARA (INDIGO)
RECORDED BY: ROBERT RUSSO, C.P.S.S. (CLA)

TP #101

0–10"
TOPSOIL, FINE SANDY LOAM

10"–32"
SUBSOIL, YELLOW–BROWN FINE SANDY LOAM

32"–62"
GRAY FINE SANDY LOAM

62"–85"
LIGHT BROWN MEDIUM SAND W/ GRAVEL

MOTTLING @ 38" (HANGING)
NO OBSERVED GROUNDWATER
LEDGE @ 62" TO 85" (VARIES)
ROOTS TO 59"

TP #102

0–14"
TOPSOIL, BROWN VERY FINE SANDY LOAM

14"–36"
SUBSOIL, YELLOW–BROWN SILT LOAM

36"–77"
GRAY & STRONG BROWN MOTTLED VERY FINE SANDY LOAM

77"–101"
STRONG BROWN MEDIUM–COARSE SAND & GRAVEL

MOTTLING @ 36" (HANGING)
GROUNDWATER @ 83"
NO OBSERVED LEDGE

SOIL SAMPLE OBTAINED AT 36" FOR SIEVE ANALYSIS & PERMEABILITY TESTING

PERMEABILITY = 1.15 FT./DAY (0.58 IN./HR)

TP #103

0–6"
TOPSOIL, BROWN FINE SANDY LOAM

6"–28"
SUBSOIL, YELLOW–BROWN SILT LOAM

28"–74"
LIGHT GRAY VERY FINE SANDY LOAM W/ LIGHT MOTTLES

74"–87"
GRAY SANDY LOAM W/ COBBLES & STONES

MOTTLING @ 37" (HANGING)
NO OBSERVED GROUNDWATER
NO OBSERVED LEDGE
ROOTS TO 49"

SOIL SAMPLE OBTAINED AT 24" TO 36" FOR SIEVE ANALYSIS & PERMEABILITY TESTING

PERMEABILITY = 0.58 FT./DAY (0.29 IN./HR)

TP #104

0–9"
TOPSOIL

9"–18"
SUBSOIL, FINE SANDY LOAM

18"–47"
STRONG BROWN & GRAY VERY FINE SANDY LOAM

47"–113"
GRAY MEDIUM SAND W/ GRAVEL & COBBLES

MOTTLING @ 18" (HANGING)
MOTTLING @ 47 (TRUE SEASONAL HIGH GW)
NO OBSERVED GROUNDWATER
NO OBSERVED LEDGE
ROOTS TO 49"

TP #105

0–11"
TOPSOIL, DARK BROWN FINE SANDY LOAM

11"–23"
SUBSOIL, YELLOW–BROWN SANDY LOAM W/ GRAVEL & COBBLES

23"–50"
LIGHT BROWN MEDIUM–COARSE SAND W/ GRAVEL

50"–114"
GRAY MEDIUM–COARSE SAND W/ GRAVEL

NO OBSERVED MOTTLING
NO OBSERVED GROUNDWATER
NO OBSERVED LEDGE
ROOTS TO 36"

TP #106

0–10"
TOPSOIL, STRONG BROWN FINE SANDY LOAM

10"–43"
SUBSOIL, YELLOW–BROWN FINE SANDY LOAM

43"–114"
GRAY LOAMY SAND W/ GRAVEL & COBBLES

MOTTLING @ 43" (HANGING)
NO OBSERVED GROUNDWATER
NO OBSERVED LEDGE
ROOTS TO 59"

TP #107

0–16"
TOPSOIL, DARK BROWN FINE SANDY LOAM

16"–32"
SUBSOIL, YELLOW–BROWN VERY FINE SANDY LOAM

32"–77"
YELLOW–BROWN & GRAY VERY FINE SANDY LOAM

77"–110"
LIGHT BROWN COARSE SAND W/ GRAVEL & COBBLES

MOTTLING @ 32" (HANGING)
NO OBSERVED GROUNDWATER
NO OBSERVED LEDGE
ROOTS TO 67"

TP #108

0–12"
TOPSOIL, BROWN FINE SANDY LOAM

12"–33"
SUBSOIL, LIGHT BROWN VERY FINE SANDY LOAM

33"–84"
VERY LIGHT BROWN VERY FINE SANDY LOAM

NO OBSERVED MOTTLING
NO OBSERVED GROUNDWATER
POSSIBLE LEDGE @ 84"
ROOTS TO 36"

SOIL SAMPLE OBTAINED AT 48" FOR SIEVE ANALYSIS & PERMEABILITY TESTING

PERMEABILITY = 0.49 FT./DAY (0.25 IN./HR)

PLAN PREPARED BY:
INDIGO LAND DESIGN, LLC
JOSEPH WREN, P.E.
CT REG. NO. 21090
40 ELM STREET, 2ND FLOOR
OLD SAYBROOK, CT 06475
PHONE: (860) 388-9343
WEB: INDIGO-LAND.COM

NOT FOR CONSTRUCTION UNTIL THIS NOTE IS REMOVED

#	DATE	DESCRIPTION		
2	7/23/2024	REVISIONS PER TOWN COMMENTS, MISC.	RC	BK
1	7/17/2024	REVISIONS PER TOWN COMMENTS, MISC.	RG	

GRADING PLAN

PREPARED FOR 1721, LLC
430 MOHEGAN AVENUE PARKWAY & 23B OLD NORWICH ROAD
TAX MAP 76 LOTS 10164 & 5600
WATERFORD, CONNECTICUT

DATE: MAY 21, 2024
SCALE: 1"=30'
DRAWN BY: CO, MA, RG, RM
CHECKED BY: JW
DWG. NO.: GP-1
SHEET NO.: 2 of 13
JOB. NO.: 2023-922

SOIL EROSION & SEDIMENTATION CONTROL PLAN NARRATIVE

THE SITE CONTRACTOR MUST FOLLOW ALL GUIDELINES SET FORTH IN THE MANUAL ENTITLED "CONNECTICUT GUIDELINES FOR SOIL EROSION AND SEDIMENT CONTROL", PUBLISHED: SEPTEMBER 30, 2023 OR AS AMENDED, EFFECTIVE: MARCH 30, 2024, BY THE CONNECTICUT COUNCIL ON SOIL AND WATER CONSERVATION IN COOPERATION WITH THE CONNECTICUT DEPARTMENT OF ENVIRONMENTAL PROTECTION.

PROJECT DESCRIPTION

THE APPLICANT IS PROPOSING TO EXTEND ROBERTS COURT INTO THE SITE AND CREATE A 20' WIDE PRIVATE LOOPED ROAD WITH 20 RESIDENTIAL BUILDINGS (16 SINGLE–FAMILY HOUSES AND 4 DUPLEXES FOR A TOTAL OF 24 DWELLING UNITS), INSTALL A SANITARY SEWER SYSTEM, A STORM SEWER SYSTEM, STORMWATER MANAGEMENT AREAS AND OTHER UTILITIES, LANDSCAPING, SITE LIGHTING AND OTHER ASSOCIATED IMPROVEMENTS.

CONSTRUCTION IS ANTICIPATED TO COMMENCE IN SUMMER/FALL 2024. ALL EROSION AND SEDIMENT CONTROLS SHALL BE INSTALLED PRIOR TO CONSTRUCTION ACTIVITIES. E & S CONTROLS SHALL BE MAINTAINED AND REPAIRED OR REPLACED AS NEEDED THROUGHOUT THE CONSTRUCTION DURATION. ALL E & S CONTROLS SHALL BE REMOVED AND PROPERLY DISPOSED OF AS SOON AS THE SITE IS COMPLETELY STABILIZED.

CONSTRUCTION SEQUENCE

1. CONTACT "CALL BEFORE YOU DIG" TO MARK OUT ALL UTILITY LOCATIONS PRIOR TO ANY CONSTRUCTION ACTIVITIES.
2. ENSURE ALL LAND USE PERMITS HAVE BEEN SECURED. OBTAIN ALL NECESSARY PERMITS.
3. LAND SURVEYOR SHALL STAKE OUT ALL CLEARING LIMITS, ALL INFRASTRUCTURE IMPROVEMENTS, UTILITIES, STORMWATER BASINS, ETC.
4. INSTALL ALL EROSION AND SEDIMENT CONTROLS AND CONSTRUCTION ENTRANCE. MAINTAIN AND REDRESS AS NECESSARY.
5. CLEAR TREES AND BRUSH WITHIN DEVELOPMENT. LEAVE ALL STUMPS IN PLACE UNTIL ALL E&S CONTROLS ARE IN PLACE AND IN CONFORMANCE WITH THE APPROVED PLAN AND INSPECTED BY THE DESIGN ENGINEER AND/OR THE TOWN WETLANDS OFFICER.
6. REMOVE ALL STUMPS AND HAUL OFF SITE. NO STUMPS, LOGS, OR OTHER ORGANIC MATTER SHALL BE BURIED ON SITE.
7. STRIP TOPSOIL AND STOCKPILE AS SHOWN ON THE PLAN. IF PILES WILL REMAIN IN PLACE FOR MORE THAN 30 DAYS, APPLY TEMPORARY SEED MIXTURE. ALL STOCKPILES SHALL BE SURROUNDED BY SILT FENCE OR WOOD CHIP BERMS.
8. INSTALL ALL E&S CONTROLS AS INDICATED ON THE PLAN, INCLUDING TEMPORARY SEDIMENT TRAPS. MAINTAIN ALL E&S CONTROLS ON A DAILY BASIS AND REPAIR AS NEEDED.
9. ROUGH GRADE ROAD AND INSTALL UNDERGROUND UTILITIES, LIGHTING, AND DRAINAGE. INSTALL SILT SACKS AT ALL CATCH BASINS AND MAINTAIN THEM REGULARLY AND AS NEEDED.
10. CONSTRUCT STORMWATER BASINS, GRASSED SWALES, AND OUTFALLS. THE STORMWATER BASINS SHALL BE COMPLETED, PLANTED, AND STABILIZED PRIOR TO RECEIVING ANY DISCHARGE FROM THE ROADWAY AND UPGRADIENT CONSTRUCTION RUNOFF. STORMWATER MANAGEMENT BASINS SHALL NEVER BE USED FOR E&S CONTROL. AVOID OVERCOMPACTION OF UNDERLYING SOILS. PLANT BUFFER AREAS AND BASINS IN STRICT CONFORMANCE WITH THE PLANS FROM ROBERT RUSSO, C.P.S.S. – ALL WETLAND PLANTING SHALL BE DONE UNDER THE SUPERVISION AND DIRECTION OF ROBERT RUSSO, C.P.S.S. OF CLA ENGINEERS, INC.
11. INSTALL BASE COURSE OF ASPHALT FOR ENTIRE ROADWAY.
12. BEGIN CONSTRUCTION OF HOUSES AND UTILITY SERVICE CONNECTIONS.
13. FINISH GRADE AREAS AROUND HOUSES AND LANDSCAPE ACCORDINGLY PER SPECIFICATIONS PROVIDED IN THE PLANS. ANY EXCESS DEBRIS, BOULDERS, TREE LIMBS, STUMPS, ETC. SHALL BE HAULED OFF SITE AND DISPOSED OF PROPERLY.
14. INSTALL TOP COURSE OF ASPHALT AND PAVEMENT STRIPING. INSTALL ROADWAY SIGNAGE. COMPLETE ALL LANDSCAPING.
15. ALL E&S CONTROLS SHALL REMAIN IN PLACE UNTIL THE SITE IS FULLY STABILIZED. UPON APPROVAL OF THE DESIGN ENGINEER AND TOWN WETLANDS OFFICER, ALL REMAINING E&S CONTROLS SHALL BE COMPLETELY REMOVED AND DISPOSED OF PROPERLY OFF SITE.

LAND DISTURBANCE

1. ALL EXISTING VEGETATION OUTSIDE OF THE CLEARING LIMITS SHALL BE PROTECTED. EXISTING VEGETATION SHALL BE REMOVED ONLY IN AREAS NECESSARY FOR SITE CONSTRUCTION ACTIVITIES. ANY ADDITIONAL CLEARING OUTSIDE OF THE PROPOSED CLEARING LIMITS SHALL BE APPROVED BY TOWN STAFF PRIOR TO CLEARING.
2. ALL AREAS SHALL REMAIN UNDISTURBED UNTIL IMMEDIATELY PRIOR TO SITE DEVELOPMENT.
3. ALL CONSTRUCTION EQUIPMENT, MATERIALS AND STOCKPILES SHALL NOT BE PLACED OUTSIDE OF THE DISTURBED AREAS.
4. ALL TREES, BRUSH, STUMPS, WOOD CHIPS OR OTHER ORGANIC MATTER SHALL BE DISPOSED OF PROPERLY OFF–SITE. WOOD CHIPS MAY BE USED AS A SILTATION BARRIER DURING CONSTRUCTION AND SPREAD AFTER SITE IS STABILIZED. NO ORGANIC MATTER INCLUDING TREES, BRUSH AND STUMPS SHALL BE BURIED ON–SITE.

STRIPPING AND STOCKPILING

ALL STOCKPILES THAT CONSIST OF ERODIBLE MATERIALS SHALL BE LOCATED WITHIN AREAS AS SHOWN ON THE SITE PLAN AND SURROUNDED BY A SILTATION BARRIER. ANY STOCKPILE THAT WILL REMAIN UNDISTURBED FOR A PERIOD LONGER THAN 30 DAYS SHALL BE SEEDED WITH A TEMPORARY GRASS SEED MIXTURE TO PREVENT EXCESSIVE EROSION AND SEDIMENTATION.

TRENCH EXCAVATION AND BACKFILL

THE CONTRACTOR SHALL PROPERLY MAINTAIN ALL BACKFILLED EXCAVATIONS. ANY DEPRESSIONS DUE TO SETTLING IN THESE AREAS SHALL BE FILLED AND RESEEDED AS NECESSARY.

THE WIDTH OF ALL EXCAVATED TRENCHES SHALL BE KEPT AS NARROW AS PRACTICABLE TO ACCOMMODATE THE WORK. ALL MATERIALS EXCAVATED FROM TRENCHES SHALL BE STOCKPILED AND USED AS TRENCH BACKFILL MATERIAL UNLESS IT IS DETERMINED TO BE UNSUITABLE BY THE ENGINEER. EXCESS MATERIALS SHALL BE PROPERLY DISPOSED OF BY THE CONTRACTOR.

SOIL EROSION AND SEDIMENT CONTROLS

ALL ADJACENT PROPERTIES AND RECEIVING WATERCOURSES AND / OR WETLAND AREAS SHALL BE ADEQUATELY PROTECTED FROM SOIL EROSION AND SEDIMENTATION BOTH DURING AND AFTER CONSTRUCTION.

ADDITIONAL EROSION AND SEDIMENT CONTROLS MAY BE REQUIRED BY THE TOWN AND SHALL BE INSTALLED AND MAINTAINED BY THE CONTRACTOR. THE CONTRACTOR SHALL BE RESPONSIBLE FOR THE PROPER INSTALLATION AND MAINTENANCE OF ALL EROSION AND SEDIMENT CONTROLS BEFORE, DURING AND AFTER CONSTRUCTION. THE CONTRACTOR IS ALSO RESPONSIBLE FOR THE PROPER REMOVAL AND DISPOSAL OF ALL EROSION AND SEDIMENT CONTROLS ONCE THE SITE IS COMPLETELY STABILIZED.

ALL EROSION AND SEDIMENT CONTROLS SHALL BE INSPECTED WEEKLY AND AFTER ALL RAINFALL EVENTS. E & S CONTROLS SHALL BE REPAIRED OR REPLACED AS NECESSARY WITHIN 24 HOURS THROUGHOUT THE CONSTRUCTION DURATION.

IF NECESSARY, A TEMPORARY FILTER FABRIC SILT BARRIER SHALL BE PLACED BENEATH THE GRATE OF THE PROPOSED CATCH BASIN TO PREVENT ANY SILTATION OF THE DRAINAGE SYSTEM. THE FILTER FABRIC SHALL BE REMOVED IMMEDIATELY AFTER THE SURROUNDING AREAS ARE ADEQUATELY STABILIZED.

ALL ACCUMULATED SEDIMENTS AT ALL EROSION AND SEDIMENT CONTROLS SHALL BE PERIODICALLY REMOVED AND SPREAD IN AREAS THAT ARE NOT SUBJECT TO EROSION.

THE CONTRACTOR SHALL EMPLOY BEST MANAGEMENT PRACTICES TO CONTROL STORMWATER DISCHARGES AND TO PREVENT EROSION AND SEDIMENTATION AND TO OTHERWISE PREVENT POLLUTION OF WETLANDS OR WATERCOURSES OR PRIVATE PROPERTY. THE CONTRACTOR SHALL IMMEDIATELY INFORM THE TOWN OF ANY PROBLEMS INVOLVING EROSION AND/OR SEDIMENTATION THAT HAVE DEVELOPED IN THE COURSE OF, OR THAT ARE CAUSED BY, THE AUTHORIZED WORK.

THE RESPONSIBLE CONTACT PERSON FOR THE INSTALLATION AND MAINTENANCE OR EROSION AND SEDIMENTATION CONTROLS ON THIS PROJECT WILL BE THE SITE CONTRACTOR AND / OR THE GENERAL CONTRACTOR. ONCE THE GENERAL CONTRACTOR IS SELECTED, CONTACT INFORMATION WILL BE PROVIDED TO THE TOWN.

VEGETATIVE TURF ESTABLISHMENT PROCEDURE

SCARIFY ALL AREAS TO BE TOPSOILED AND SEEDED. APPLY A MINIMUM OF 4 INCHES OF TOPSOIL ON ALL AREAS TO BE SEEDED. APPLY GRASS SEED, LIME, FERTILIZER AND MULCH ACCORDING TO THE FOLLOWING SCHEDULE:

PERMANENT SEED MIXTURE:

CREEPING RED FESCUE	0.45 LBS. PER 1,000 SQ. FT.
REDTOP	0.05
TALL FESCUE	0.45
TOTAL	0.95

FERTILIZER:
10–10–10 APPLY AT 7.5 LBS. PER 1,000 SQ. FT.

LIMESTONE:
APPLY AT 150 LBS. PER 1,000 SQ. FT.

MULCHING:
SPREAD HAY OR STRAW OVER ALL AREAS AFTER SEEDING. USE 1 1/2 TO 2 BALES PER 1,000 SQ. FT. TARGET FOR 100% COVERAGE. ANCHOR BY USING NETTING OR TRACKING AS NECESSARY.

TEMPORARY EROSION CONTROL BLANKETS:
USE TEMPORARY EROSION CONTROL BLANKETS ON ALL SEEDED SLOPES STEEPER THAN 3 (H) TO 1 (V) AND/OR AS DIRECTED BY THE DESIGN ENGINEER.

SEEDING DATES:
SEEDING DATES IN CONNECTICUT ARE NORMALLY APRIL 1 THROUGH JUNE 15 AND AUGUST 15 THROUGH OCTOBER 1. SEED GERMINATION NORMALLY CANNOT BE EXPECTED FROM NOVEMBER THROUGH FEBRUARY. IF ADEQUATE SEED GERMINATION IS NOT POSSIBLE DUE TO TIME OF YEAR CONSTRAINTS, MULCHING SHALL BE ADEQUATELY PROVIDED TO PROTECT THE SEED FROM WIND AND SURFACE EROSION UNTIL THE WEATHER IMPROVES AND THE SEEDING BECOMES WELL ESTABLISHED.

PLAN PREPARED BY:
INDIGO LAND DESIGN, LLC
JOSEPH VIREN, P.E.
CT REG. NO. 21090
40 ELM STREET, 2ND FLOOR
OLD SAYBROOK, CT 06475
PHONE: (860) 388-9343
WEB: INDIGO-LAND.COM

NOT FOR CONSTRUCTION UNTIL THIS NOTE IS REMOVED

#	DATE	DESCRIPTION		BY
2	7/23/2024	REVISIONS PER TOWN COMMENTS, MISC.	RC	RG
1	7/17/2024	REVISIONS PER TOWN COMMENTS, MISC.	RC	RG

EROSION & SEDIMENTATION CONTROL PLAN

PREPARED FOR 1721, LLC
430 MOHEGAN AVENUE PARKWAY & 23B OLD NORWICH ROAD
TAX MAP 76 LOTS 10164 & 5600
WATERFORD, CONNECTICUT

DATE: MAY 21, 2024
SCALE: 1"=30'
DRAWN BY: CO, MA, RG, RM
CHECKED BY: JW
DWG. NO.: ESC-1
SHEET NO.: 3 of 13
JOB. NO.: 2023-922

CONSTRUCTION NOTES:

1. THE LOCATIONS OF UNDERGROUND UTILITIES SHOWN HEREON ARE BASED ON FIELD LOCATIONS AND INFORMATION PROVIDED BY OTHERS. THEIR ACTUAL LOCATION MAY VARY FROM THOSE INDICATED AND ALL UNDERGROUND UTILITIES MAY NOT BE SHOWN. THE CONTRACTOR SHALL CONTACT "CALL BEFORE YOU DIG" AT 1-800-922-4455 TO MARK OUT ALL UNDERGROUND UTILITIES A MINIMUM OF 3 BUSINESS DAYS PRIOR TO COMMENCING ANY CONSTRUCTION ACTIVITY. CONTRACTOR SHALL VERIFY ALL LOCATIONS, DIMENSIONS AND ELEVATIONS OF ALL UTILITIES PRIOR TO CONSTRUCTION. THE CONTRACTOR SHALL ADHERE TO ALL APPLICABLE TOWN OF WATERFORD STANDARDS AND REGULATIONS.
2. ALL PROPERTY LINES SHALL BE VERIFIED IN THE FIELD. NO PRIVATE PROPERTY SHALL BE DISTURBED UNLESS PROPER RIGHTS ARE OBTAINED PRIOR TO CONSTRUCTION.
3. THE CONTRACTOR SHALL BE RESPONSIBLE FOR OBTAINING AND CONFORMING TO ALL PERMITS, INCLUDING AN EXCAVATION PERMIT AND A SITE ACCESS PERMIT, AND ALL BONDING AND INSURANCE REQUIRED BY THE TOWN OF WATERFORD AND CUSTODIAL UTILITY COMPANIES. IF ANY BLASTING IS REQUIRED, ALL PRE-BLAST SURVEYS AND ANY APPLICABLE PERMITS SHALL BE COORDINATED AND SECURED BY THE CONTRACTOR.
4. THE CONTRACTOR SHALL OBTAIN, REVIEW AND ADHERE TO ALL REQUIREMENTS AND ANY CONDITIONS OF APPROVAL OF THE TOWN OF WATERFORD.
5. THE CONTRACTOR SHALL TAKE ALL NECESSARY MEASURES TO PROTECT ADJACENT PROPERTIES, STREETS AND WETLANDS FROM ANY EROSION AND/OR SEDIMENTATION.
6. ALL PROPOSED UTILITIES SHALL BE INSTALLED UNDERGROUND.
7. ALL MATERIALS AND CONSTRUCTION METHODS FOR SITE WORK SHALL BE IN CONFORMANCE WITH THE CONNECTICUT D.O.T. "STANDARD SPECIFICATIONS FOR ROADS, BRIDGES AND INCIDENTAL CONSTRUCTION" FORM 818, 2020 OR AS AMENDED. ANY VARIATION FROM THIS SPECIFICATION SHALL BE REVIEWED AND APPROVED BY THE DESIGN ENGINEER PRIOR TO IMPLEMENTATION.
8. ALL JOINTS BETWEEN THE EXISTING AND NEW PAVEMENT SHALL BE PROPERLY SAWCUT, TACK COATED AND SEALED AS APPLICABLE. ALL PROPOSED JOINTS SHALL BE FLUSH AND MATCH EXISTING GRADES.
9. PRIOR TO CONSTRUCTION, A LICENSED LAND SURVEYOR SHALL SET A STABLE ON-SITE BENCHMARK (NGVD-29 DATUM) AND ALL PROPOSED IMPROVEMENTS SHALL BE STAKED OUT.
10. ALL EXISTING DRAINAGE PATTERNS SHALL BE MAINTAINED. THE CONTRACTOR SHALL GRADE THE PROPERTY IN SUCH A MANNER TO MAINTAIN EXISTING LOCAL DRAINAGE PATTERNS AND TO PREVENT EXCESS RUNOFF AND/OR PONDING ON ADJACENT PROPERTIES, BOTH DURING AND AFTER CONSTRUCTION.
11. ALL UTILITY DEMANDS AND SIZES AND OPTIMAL BUILDING ENTRY LOCATIONS, SITE LIGHTING WIRING, UNDERSLAB UTILITY CONNECTIONS, AND ALL OTHER UTILITY RELATED INFORMATION SHALL BE DETERMINED BY THE PROJECT MEP ENGINEER. REFER TO PROJECT MEP PLANS FOR DETAILED INFORMATION.
12. A LICENSED LAND SURVEYOR SHALL PREPARE AN AS-BUILT OF THE PROPOSED BUILDING AND UTILITIES CERTIFYING THAT THE IMPROVEMENTS ARE IN SUBSTANTIAL CONFORMANCE WITH THE APPROVED PLAN. THE AS-BUILT PLAN SHALL BE COMPLETED IN A TIMELY MANNER.
13. FINAL SIZE AND LOCATION OF THE PROPOSED TRANSFORMER TO BE DETERMINED BY CUSTODIAL UTILITY COMPANY.
14. THE CONTRACTOR SHALL PREPARE THE SITE AND PERFORM THE WORK IN A WORKMANLIKE MANNER AND SHALL KEEP THE ROADWAYS SAFE TO VEHICLES AND PEDESTRIANS AT ALL TIMES.
15. GENERAL LOT GRADING AND THE FINISHED FLOOR ELEVATION OF THE PROPOSED BUILDING ARE BASED ON AVAILABLE INFORMATION. THESE ELEVATIONS MAY BE ADJUSTED BY THE CONTRACTOR TO CONFORM TO ACTUAL FIELD CONDITIONS UPON REVIEW AND APPROVAL OF THE DESIGN ENGINEER.
16. EXISTING INTERIOR STONEWALLS TO BE REMOVED, STOCKPILED AND REUSED ON SITE. ALL EXISTING STONEWALLS ALONG THE PERIMETER OF THE PROPERTY SHALL REMAIN IN PLACE.
17. THE CONTRACTOR SHALL OBTAIN ALL REQUIRED PERMITS PRIOR TO CONSTRUCTION INCLUDING EXCAVATION AND SITE ACCESS PERMITS PRIOR TO ANY WORK WITHIN THE TOWN RIGHT-OF-WAY. ALL ZONING COMPLIANCE PERMITS AND APPROVALS FROM THE DEPARTMENT OF PUBLIC WORKS SHALL BE OBTAINED PRIOR TO THE START OF CONSTRUCTION. A PRE-CONSTRUCTION MEETING WITH THE PLANNING DEPARTMENT STAFF AND CONNDOT IS REQUIRED.
18. THE CONTRACTOR SHALL CONFORM TO ALL APPLICABLE TOWN OF WATERFORD STANDARDS AND REGULATIONS FOR ALL ROADWAY, DRAINAGE AND UTILITY WORK. SEE UTILITY DETAILS ON CONSTRUCTION DETAIL SHEETS.
19. CONTRACTOR SHALL REVIEW AND BE FAMILIAR WITH SECTION 25.5 AND 25.6 PF THE TOWN OF WATERFORD ZONING REGULATIONS.
20. A CLUSTER MAILBOX SHALL BE PROVIDED AT THE BEGINNING OF THE ROADWAY LOOP AND SHALL BE IN ACCORDANCE WITH THE REQUIREMENTS OF THE LOCAL POSTMASTER.
21. ROLLAWAY TRASH BARRELS AND RECYCLING BARRELS FOR INDIVIDUAL UNITS WILL BE PROVIDED AND PICKED UP WEEKLY BY ONE COMMON TRASH HAULER HIRED BY THE ASSOCIATION.
22. ANY PROPOSED TRANSFORMER OR ANY OTHER ELECTRICAL APPURTENANCES TO BE DETERMINED BY THE CUSTODIAL UTILITY COMPANY.
23. NO SNOW REMOVAL SHALL BE PLOWED OFF-SITE OR INTO THE CUL-DE-SAC FOR ROBERTS COURT.

PLAN PREPARED BY:
INDIGO LAND DESIGN, LLC
JOSEPH WREN, P.E.
CT REG. NO. 21090
40 ELM STREET, 2ND FLOOR
OLD SAYBROOK, CT 06475
PHONE: (860) 388-9343
WEB: INDIGO-LAND.COM

NOT FOR CONSTRUCTION UNTIL THIS NOTE IS REMOVED

#	DATE	DESCRIPTION		
2	7/23/2024	REVISIONS PER TOWN COMMENTS, MISC.	RG	
1	7/17/2024	REVISIONS PER TOWN COMMENTS, MISC.	RG	BK

UTILITY PLAN

PREPARED FOR 1721, LLC
430 MOHEGAN AVENUE PARKWAY & 23B OLD NORWICH ROAD
TAX MAP 76 LOTS 10164 & 5600
WATERFORD, CONNECTICUT

DATE: MAY 21, 2024
SCALE: 1"=30'
DRAWN BY: CO, MA, RG, RM
CHECKED BY: JW
DWG. NO.: UP-1
SHEET NO.: 4 of 13
JOB. NO.: 2023-922

STRUCTURE	FRAME EL.	INV. IN	INV. OUT	PIPE LENGTH	% PIPE SLOPE
SMH 1	142.70		138.90		
SMH 2	136.30	132.50	132.40	86.00	7.44
SMH 3	133.20	128.40	128.30	82.00	4.88
SMH 7	131.50	124.10	123.30	113.00	3.72
SMH 4	142.60		138.80		
SMH 5	136.80	133.30	130.60	81.00	6.79
SMH 6	133.00	126.90	126.80	60.00	6.17
SMH 7	131.50	123.40	123.30	136.00	2.50
SMH 8	133.00	122.30	122.20	92.00	1.09
EX SMH	131.65	122.10	122.00	9.00	1.11

STRUCTURE	FRAME EL.	INV. IN	INV. OUT	PIPE LENGTH	% PIPE SLOPE
CB 1	130.50		128.90		
CB 2	131.50	126.50	126.50	64.00	3.75
CB 9	130.50	126.00	126.00	50.00	1.00
CB 3	134.00		130.70		
CB 4	134.10	129.90	129.90	79.00	1.01
CB 5	134.30	129.00	129.00	83.00	1.08
CB 6	133.00	128.60	128.60	37.00	1.08
DMH 1	132.50	128.00	128.00	58.00	1.03
CB 7	130.50	126.00	126.00	105.00	1.90
CB 8	130.50	125.80	125.80	18.00	1.11
FES 3			124.70	94.00	1.17
CB 9	133.00		129.70		
CB 10	133.20	129.30	129.30	32.00	1.25
FES 4			128.30	91.00	1.10

PLAN PREPARED BY:
INDIGO LAND DESIGN, LLC
JOSEPH VREN, P.E.
CT REG. NO. 21090
40 ELM STREET, 2ND FLOOR
OLD SAYBROOK, CT 06475
PHONE: (860) 388-9343
WEB: INDIGO-LAND.COM

NOT FOR CONSTRUCTION UNTIL THIS NOTE IS REMOVED

#	DATE	DESCRIPTION	BY
2	7/23/2024	REVISIONS PER TOWN COMMENTS, MISC.	RG
1	7/17/2024	REVISIONS PER TOWN COMMENTS, MISC.	RG

SANITARY SEWER & STORM SEWER SYSTEM PLAN

PREPARED FOR 1721, LLC
430 MOHEGAN AVENUE PARKWAY & 23B OLD NORWICH ROAD
TAX MAP 76 LOTS 10164 & 5600
WATERFORD, CONNECTICUT

DATE: MAY 21, 2024
SCALE: 1"=30'
DRAWN BY: CO, MA, RG, RM
CHECKED BY: JW
DWG. NO.: SSS-1
SHEET NO.: 5 of 13
JOB. NO.: 2023-922

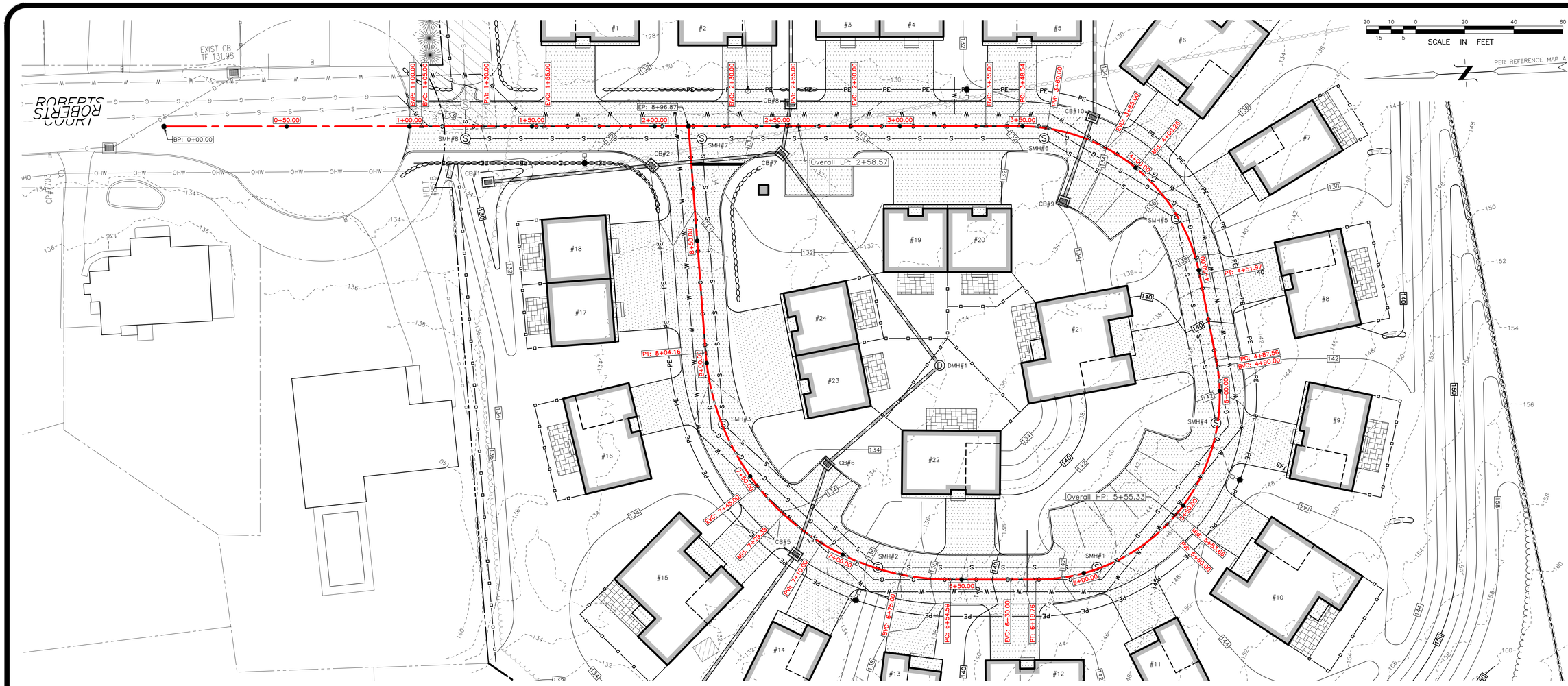

PROPOSED ROADWAY PROFILE ALONG CENTERLINE ALIGNMENT (STA. 0+00 TO 4+50)

HORIZ. SCALE: 1"=20', VERT. SCALE: 1"=5'

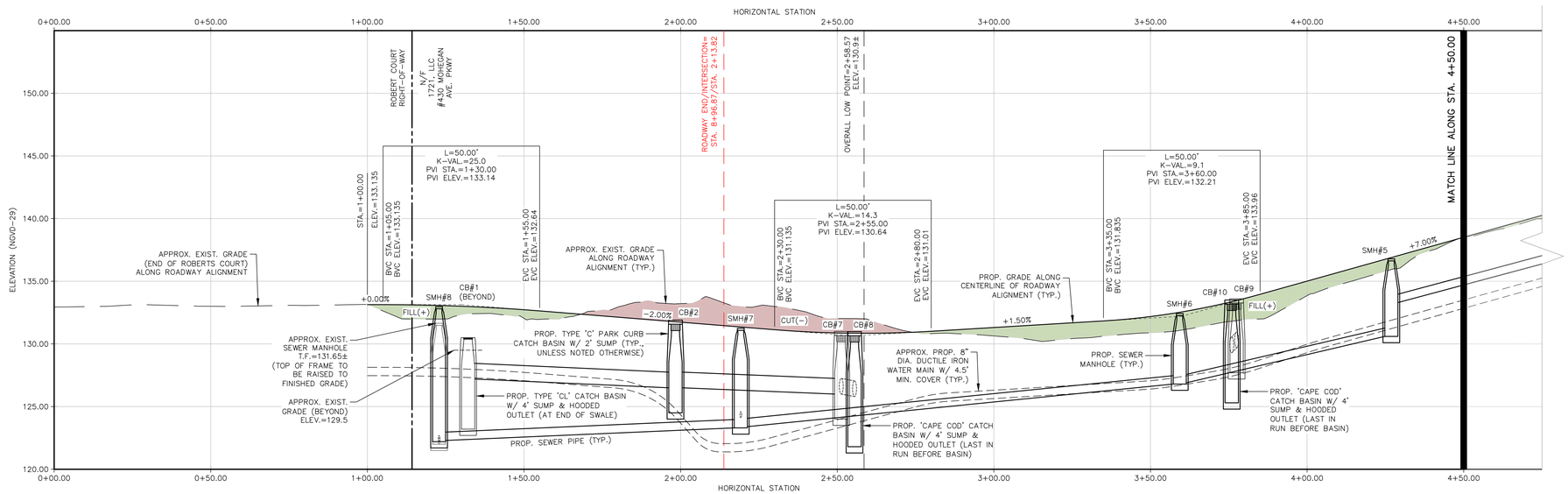

PLAN PREPARED BY:
INDIGO LAND DESIGN, LLC
JOSEPH VREN, P.E.
CT REG. NO. 21090
40 ELM STREET, 2ND FLOOR
OLD SAYBROOK, CT 06475
PHONE: (860) 388-9343
WEB: INDIGO-LAND.COM

NOT FOR CONSTRUCTION UNTIL THIS NOTE IS REMOVED

#	DATE	DESCRIPTION	BY
2	7/23/2024	REVISIONS PER TOWN COMMENTS, MISC.	RG
1	7/11/2024	REVISIONS PER TOWN COMMENTS, MISC.	RG

ROADWAY ALIGNMENT PLAN & PROFILE (STA. 0+00 TO 4+50)

PREPARED FOR 1721, LLC
430 MOHEGAN AVENUE PARKWAY & 23B OLD NORWICH ROAD
TAX MAP 76 LOTS 10164 & 5600
WATERFORD, CONNECTICUT

DATE: MAY 21, 2024
SCALE: AS NOTED
DRAWN BY: CO, MA, RG, RM
CHECKED BY: JW
DWG. NO.: RAP-1
SHEET NO.: 6 of 13
JOB. NO.: 2023-922

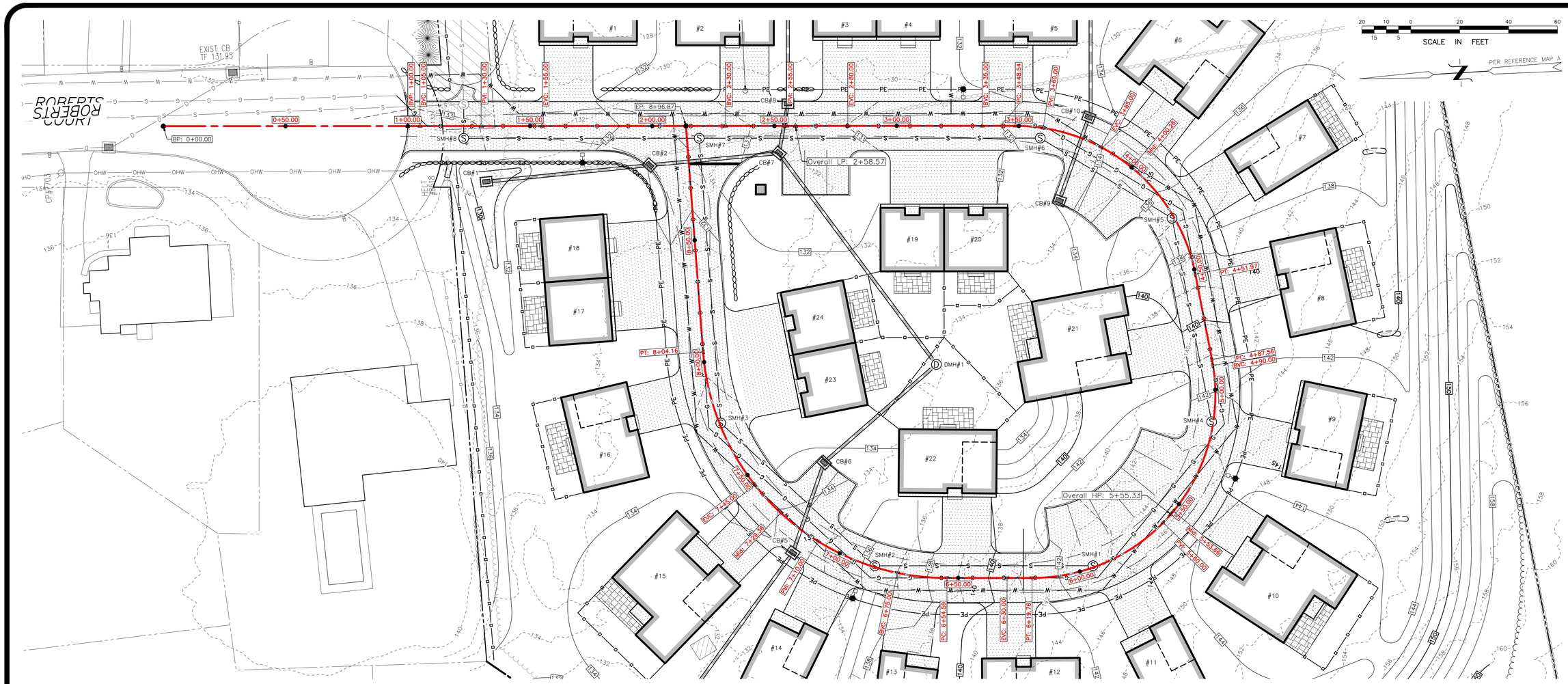

PROPOSED ROADWAY PROFILE ALONG CENTERLINE ALIGNMENT (STA. 4+50 TO 9+50)

HORIZ. SCALE: 1"=20', VERT. SCALE: 1"=5'

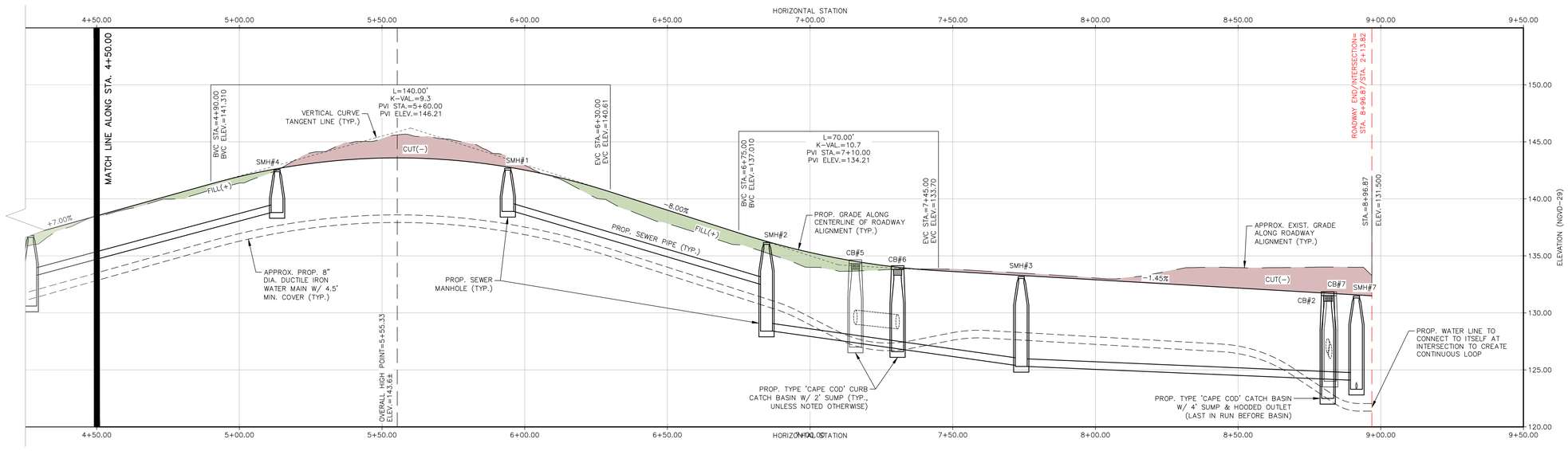

PLAN PREPARED BY:
INDIGO LAND DESIGN, LLC
JOSEPH VREN, P.E.
CT REG. NO. 21090
40 ELM STREET, 2ND FLOOR
OLD SAYBROOK, CT 06475
PHONE: (860) 388-9343
WEB: INDIGO-LAND.COM

NOT FOR CONSTRUCTION UNTIL THIS NOTE IS REMOVED

#	DATE	DESCRIPTION	BY
2	7/23/2024	REVISIONS PER TOWN COMMENTS, MISC.	RG
1	7/17/2024	REVISIONS PER TOWN COMMENTS, MISC.	RG

ROADWAY ALIGNMENT PLAN & PROFILE (STA. 4+50 TO 9+50)

PREPARED FOR 1721, LLC
430 MOHEGAN AVENUE PARKWAY & 23B OLD NORWICH ROAD
TAX MAP 76 LOTS 10164 & 5600
WATERFORD, CONNECTICUT

DATE: MAY 21, 2024
SCALE: AS NOTED
DRAWN BY: CO, MA, RG, RM
CHECKED BY: JW
DWG. NO.: RAP-2
SHEET NO.: 7 of 13
JOB. NO.: 2023-922

STORMWATER MANAGEMENT BASIN MIXTURE SCHEDULE

STORMWATER MANAGEMENT BASIN FLOOR MIX – SEED MIXTURE SPECIFICATION

25% REDTOP PANICGRASS, PA ECOTYPE (PANICUM RIGIDULUM (P. STIPITATUM), PA ECOTYPE)
16% VIRGINIA WILDRYE, PA ECOTYPE (ELYMUS VIRGINICUS, PA ECOTYPE)
16% ALKALIGRASS, 'FULTS' (PUCCINELLIA DISTANS, 'FULTS')
15% FOWL BLUEGRASS (POA PALUSTRIS)
10% CREEPING BENTGRASS (AGROSTIS STOLONIFERA)
10% TICKLEGRASS (ROUGH BENTGRASS), PA ECOTYPE (AGROSTIS SCABRA, PA ECOTYPE)
5% SOFT RUSH (JUNCUS EFFUSUS)
2% AUTUMN BENTGRASS, PA ECOTYPE (AGROSTIS PERENNANS, PA ECOTYPE)
1% PATH RUSH, PA ECOTYPE (JUNCUS TENUIS, PA ECOTYPE)

STORMWATER MANAGEMENT BASIN CONSTRUCTION NOTES

1. AFTER ROUGH GRADING AND SHAPING, THE AREA OF THE BASINS SHALL BE MARKED OFF BY APPROPRIATE FENCING TO PREVENT THE MOVEMENT OF CONSTRUCTION VEHICLES OVER AND THE POSSIBLE OVER COMPACTION OF THE UNDERLYING NATURAL SOILS.
2. BASINS SHALL NEVER BE USED FOR SEDIMENT CONTROL DURING AN ACTIVE CONSTRUCTION PERIOD.
3. DURING CONSTRUCTION, SEDIMENT SHALL BE PREVENTED FROM ENTERING THE AREAS OF THE BASINS. THE CONTRACTOR SHALL ENSURE THAT THE AREAS DRAINING TO THE BASINS ARE STABILIZED IN A TIMELY MANNER AND MAINTAINED OVER THE ENTIRE AREA DRAINING TO THE BASINS.
4. THE DESIGN ENGINEER SHALL MONITOR THE CONSTRUCTION OF THE WATER QUALITY BASINS, WILL PERFORM ALL FOLLOW UP INSPECTIONS, ASSESSMENTS AND REPORTS AND REMEDIATION WORK (IF NECESSARY) AND SHALL PROVIDE CERTIFICATION THAT THE SYSTEM WAS INSTALLED IN SUBSTANTIAL CONFORMANCE WITH THE APPROVED PLANS.
5. ALL DISTURBED AREAS SHALL BE FINE GRADED, RAKED, SEEDED AND MULCHED IN A TIMELY MANNER. BOTTOM OF THE BASINS SHALL BE SEEDED AND MULCHED IN ACCORDANCE WITH "ERNST SEED MIXTURE SCHEDULE" ON THIS SHEET. SEEDING SHALL BE QUICKLY ESTABLISHED. MINIMUM VEGETATIVE COVERAGE OF 90% SHALL BE TARGETED AND MAINTAINED.
6. FOREBAYS SHALL BE SIZED TO CONTAIN 100% OF THE WQV SHOULD BE 1.0' TO 2.0' DEEP WITH A MINIMUM LENGTH TO WIDTH RATIO OF 2:1 AND SHALL BE FORMED BY A BARRIER SUCH AS AN EARTHEN OR MODIFIED RIPRAP BERM. EACH FOREBAY SHALL ALSO HAVE A FIXED VERTICAL SEDIMENT DEPTH MARKER INSTALLED TO MEASURE SEDIMENT DEPOSITION. MICROPOOL SHALL BE 1.5'–2.0' DEEP.
7. AN 12" BIOFILTRATION SOIL MIX SHALL BE INSTALLED ALONG THE ENTIRE BOTTOM OF STORMWATER MANAGEMENT BASIN #1B AND #1C. THE BIOFILTRATION MIX SHALL CONSIST OF 50–60% SAND, 20–30% TOPSOIL, AND 20–30% WEED–FREE LEAF COMPOST OR EQUIVALENT.

WATER QUALITY BASIN MAINTENANCE PLAN

1. VEGETATION ALONG THE BASIN FLOOR AND SIDE SLOPES SHALL BE MOWED TO 4" TO 6" HEIGHT AS NEEDED. GRASS CLIPPINGS, LEAVES AND ACCUMULATED SEDIMENT AND DEBRIS SHALL BE REMOVED AT LEAST TWICE PER YEAR. MOWING SHOULD NOT BE PERFORMED WHEN GROUND IS SOFT TO AVOID CREATION OF RUTS AND COMPACTION. ANY WOODY VEGETATION SHALL BE REMOVED,
2. NO PESTICIDES OR NON–ORGANIC FERTILIZERS SHALL BE USED WITHIN THE WATER QUALITY BASINS.
3. IF THERE IS AN ACCUMULATION OF ORGANIC DEBRIS OR SEDIMENT ON THE FLOOR OF THE BASIN OR IF PONDED WATER IS REGULARLY OBSERVED MORE THAN 48 HOURS AFTER A RAINFALL EVENT, THE TOP 6" SHALL BE REMOVED AND THE EXPOSED SOIL SURFACE ROTOTILLED TO A DEPTH OF 12". SEDIMENTATION SHOULD BE REMOVED WHEN IT IS VISIBLY DRY AND READILY SEPARATES FROM THE BASIN FLOOR TO MINIMIZE SMEARING. AFTER THIS WORK HAS BEEN DONE, THE BOTTOM OF THE BASIN SHALL BE RESTORED TO ITS ORIGINAL CONDITION.
4. ROUTINE INSPECTION AND CLEANING OF THE BASINS, SIDE SLOPES, OUTLET CONTROL STRUCTURES, AND OUTLET CONTROL STRUCTURE TRASH RACKS SHALL BE MADE AFTER ANY SIGNIFICANT RAINFALL EVENT AND AT LEAST TWICE PER YEAR. INSPECTIONS SHALL INCLUDE CHECKING FOR ACCUMULATED SEDIMENT AND LEAVES & DEBRIS AND HEALTH OF THE BASIN VEGETATION. ANY ACCUMULATED SEDIMENTS, DEBRIS OR WOODY VEGETATION SHALL BE REMOVED.
5. ALL WATER QUALITY BASINS SHALL BE OWNED AND MAINTAINED BY THE HOMEOWNER'S ASSOCIATION. A YEARLY SIGNED STATEMENT SHALL BE SUBMITTED BY THE HOMEOWNER'S ASSOCIATION TO THE WATERFORD PLANNING DEPARTMENT INDICATING THAT THE STORMWATER FACILITY HAS BEEN PROPERLY MAINTAINED AND IS FUNCTIONING AS DESIGNED, PER SECTION 25.6.14.3.3 OF THE ZONING REGULATIONS.

SCHEDULE OF MAINTENANCE FREQUENCY

ALL WATER QUALITY BASINS, OUTLET CONTROL STRUCTURES, CATCH BASINS AND SUMPS, AND GRASSED SWALES SHALL BE MAINTAINED REGULARLY, AS SPECIFIED:

1. AT THE BEGINNING OF THE GROWING SEASON EVERY YEAR (THE LAST FROST IS GENERALLY AROUND APRIL).
2. AT THE END OF THE GROWING SEASON EVERY YEAR (THE FIRST FROST IS GENERALLY AROUND OCTOBER).
3. AFTER ANY MAJOR STORM EVENTS.
4. ALL OUTLET CONTROL STRUCTURES AND THEIR ORIFICES SHALL BE INSPECTED AT LEAST ONCE EVERY 3 MONTHS.

THE ROADWAY SWEEPING SHALL OCCUR AT LEAST TWICE PER YEAR, AS SPECIFIED:

1. AT THE BEGINNING OF THE GROWING SEASON EVERY YEAR (THE LAST FROST IS GENERALLY AROUND APRIL).
2. AT THE END OF THE GROWING SEASON EVERY YEAR (THE FIRST FROST IS GENERALLY AROUND OCTOBER).

CLA Engineers, Inc.
Civil • Structural • Survey
317 MAIN STREET • NORWICH, CT 06360 • (860) 886-1966 • (860) 886-9165 FAX

July 1, 2024

Planting Schedule - Roberts Ct (Indigo)

Common name	Scientific name	Quantity (1B/1C)	Spacing	WL Status
Tussock sedge	*Carex stricta*	300 (78/222)	2ft on center	OBL
Soft rush	*Juncus effusus*	300 (78/222)	2ft on center	OBL
Pickerelweed	*Pontederia cordata*	300 (78/222)	2ft on center	OBL
Three-way sedge	*Dulichium arundinaceum*	300 (78/222)	2ft on center	OBL
Blue flag iris	*Iris versicolor*	300 (78/222)	2ft on center	OBL
Bur-reed	*Sparganium americanum*	300 (78/222)	2ft on center	OBL

All plantings to be randomly distributed at basin bottom (127' elevation for basin 1B, 124' for basin 1C)

Mathematical calculations:
Basin 1C approx.. 4837 sqft: 1209 plants with 2ft spacing
Basin 1B approx. 1711 sqft: 428 plants with 2ft spacing
Number of total plants required based on 2ft spacing approx. 1637
Total number of each species assuming equal amounts of all plants approx. 272 (6 flats each)

Seed mix: New England Erosion Control/Restoration Mix For Detention Basins and Moist Sites
Use 5 pounds at 1250 sqft/lb around edges of basin 1B and 1C- do not add to basin bottom

Contact: 413-548-8000

- Description from manufacturer (New England Wetland Plants): The New England Erosion Control/Restoration Mix for Detention Basins and Moist Sites contains a selection of native grasses and wildflowers designed to colonize generally moist, recently disturbed sites where quick growth of vegetation is desired to stabilize the soil surface. It is an appropriate seed mix for ecologically sensitive restorations that require stabilization as well as long-term establishment of native vegetation.
- This mix is particularly appropriate for detention basins that do not hold standing water. Many of the plants in this mix can tolerate infrequent inundation, but not constant flooding. The mix may be applied by hand, by the mechanical spreader, or by hydro-seeder. After sowing, lightly rake, roll or cultipack to insure good seed to soil contact. Best results are obtained with a Spring or late Summer seeding. Late Fall and Winter dormant seeding requires an increase in the application rate. A light mulching of clean, weed-free straw is recommended.

M. Ahern, Soil Scientist I
CLA Engineers, Norwich, CT

PLANTING SCHEDULE FOR STORMWATER MANAGEMENT BASINS #1B & #1C

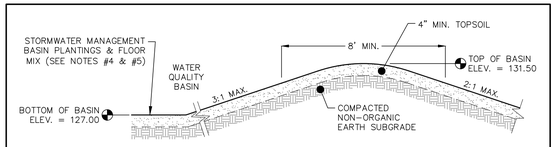

TYPICAL BASIN CROSS–SECTION

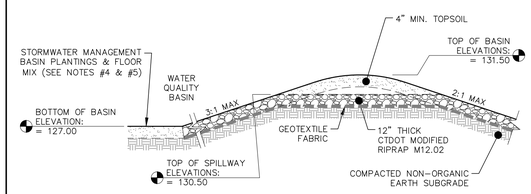

TYPICAL BASIN CROSS–SECTION AT SPILLWAY

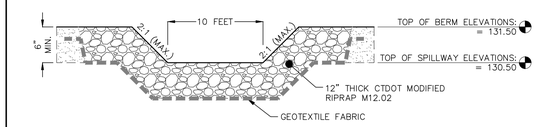

TYPICAL SPILLWAY DETAIL

NOTES:
1. REFER TO "STORMWATER MANAGEMENT BASIN CONSTRUCTION NOTES" ON THIS SHEET FOR ADDITIONAL INFORMATION.
2. BOTTOM OF STORMWATER MANAGEMENT BASIN TO BE SEEDED WITH 'STORMWATER MANAGEMENT BASIN FLOOR MIX' BY ERNST CONSERVATION SEEDS.
3. SIDE SLOPES AND TOP OF STORMWATER MANAGEMENT BASIN TO BE SEEDED WITH 'PERMANENT SEED MIXTURE' (SEE NOTES ON THIS SHEET) AND MULCHED.
4. INSTALL PLANTINGS ALONG BOTTOM OF BASIN PER "PLANTING SCHEDULE FOR STORMWATER MANAGEMENT BASINS #1B & #1C" ON THIS SHEET.
5. THE BOTTOM OF THE BASIN SHALL BE OVER EXCAVATED 12 INCHES AND A 12–INCH BIOFILTRATION SOIL MIX SHALL BE INSTALLED ALONG THE ENTIRE BOTTOM OF THE STORMWATER MANAGEMENT BASIN. THE BIOFILTRATION MIX SHALL CONSIST OF 50–60% SAND, 20–30% TOPSOIL, AND 20–30% WEED–FREE LEAF COMPOST OR EQUIVALENT. THE BIOFILTRATION MIX AND UNDERLYING SOILS SHALL NOT BE COMPACTED.

STORMWATER MANAGEMENT BASIN #1B DETAIL
NOT TO SCALE

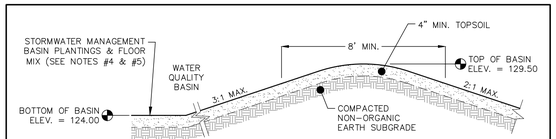

TYPICAL BASIN CROSS–SECTION

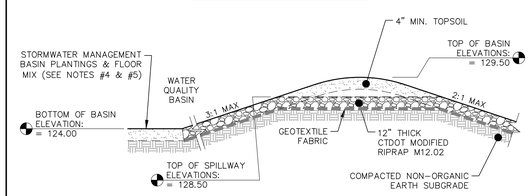

TYPICAL BASIN CROSS–SECTION AT SPILLWAY

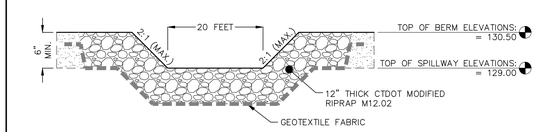

TYPICAL SPILLWAY DETAIL

NOTES:
1. REFER TO "STORMWATER MANAGEMENT BASIN CONSTRUCTION NOTES" ON THIS SHEET FOR ADDITIONAL INFORMATION.
2. BOTTOM OF STORMWATER MANAGEMENT BASIN TO BE SEEDED WITH 'STORMWATER MANAGEMENT BASIN FLOOR MIX' BY ERNST CONSERVATION SEEDS.
3. SIDE SLOPES AND TOP OF STORMWATER MANAGEMENT BASIN TO BE SEEDED WITH 'PERMANENT SEED MIXTURE' (SEE NOTES ON THIS SHEET) AND MULCHED.
4. INSTALL PLANTINGS ALONG BOTTOM OF BASIN PER "PLANTING SCHEDULE FOR STORMWATER MANAGEMENT BASINS #1B & #1C" ON THIS SHEET.
5. THE BOTTOM OF THE BASIN SHALL BE OVER EXCAVATED 12 INCHES AND A 12–INCH BIOFILTRATION SOIL MIX SHALL BE INSTALLED ALONG THE ENTIRE BOTTOM OF THE STORMWATER MANAGEMENT BASIN. THE BIOFILTRATION MIX SHALL CONSIST OF 50–60% SAND, 20–30% TOPSOIL, AND 20–30% WEED–FREE LEAF COMPOST OR EQUIVALENT. THE BIOFILTRATION MIX AND UNDERLYING SOILS SHALL NOT BE COMPACTED.

STORMWATER MANAGEMENT BASIN #1C DETAIL
NOT TO SCALE

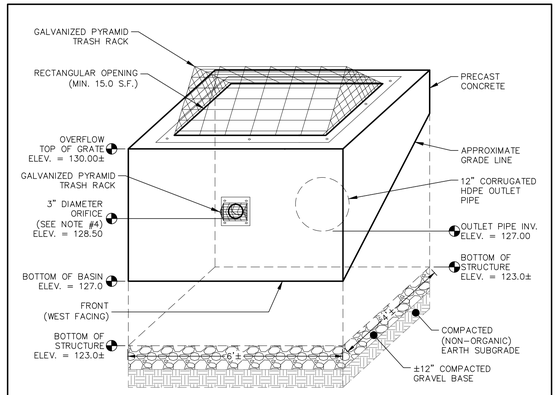

NOTES:
1. ANY JOINTS IN RISERS SHALL BE MORTARED AND WATERTIGHT TO THE SATISFACTION OF THE ENGINEER.
2. SHOP DRAWINGS SHALL BE SUBMITTED TO DESIGN ENGINEER FOR REVIEW AND APPROVAL PRIOR TO FABRICATION.
3. WIDTH AND DEPTH DIMENSIONS MAY VARY SLIGHTLY.
4. THE 3" DIAMETER ORIFICE SHALL HAVE A 3" DIAMETER SCH. 40 SOLID PVC PIPE INSERTED INTO THE OPENING (NOT SHOWN FOR CLARITY). THE PIPE SHALL PROJECT 2 TO 3 INCHES INTO THE BASIN AND SHALL HAVE A GALVANIZED PYRAMID TRASH RACK OVER THE PIPE.

OUTLET CONTROL STRUCTURE DETAIL
FOR STORMWATER MANAGEMENT BASIN #1B
NOT TO SCALE

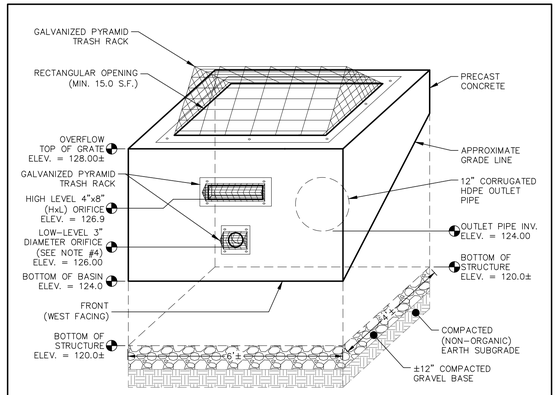

NOTES:
1. ANY JOINTS IN RISERS SHALL BE MORTARED AND WATERTIGHT TO THE SATISFACTION OF THE ENGINEER.
2. SHOP DRAWINGS SHALL BE SUBMITTED TO DESIGN ENGINEER FOR REVIEW AND APPROVAL PRIOR TO FABRICATION.
3. WIDTH AND DEPTH DIMENSIONS MAY VARY SLIGHTLY.
4. THE 3" DIAMETER ORIFICE SHALL HAVE A 3" DIAMETER SCH. 40 SOLID PVC PIPE INSERTED INTO THE OPENING (NOT SHOWN FOR CLARITY). THE PIPE SHALL PROJECT 2 TO 3 INCHES INTO THE BASIN AND SHALL HAVE A GALVANIZED PYRAMID TRASH RACK OVER THE PIPE.

OUTLET CONTROL STRUCTURE DETAIL
FOR STORMWATER MANAGEMENT BASIN #1C
NOT TO SCALE

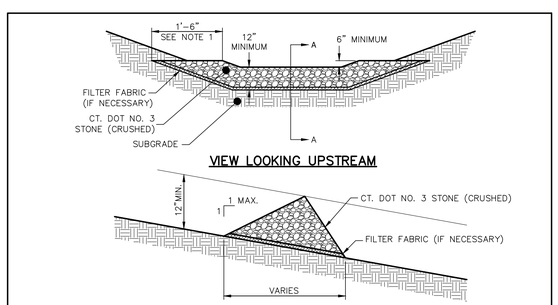

VIEW LOOKING UPSTREAM

SECTION A–A

NOTES:
1. KEY STONE INTO THE BANKS AS SHOWN TO PREVENT FLOW FROM FLANKING THE CHECK DAM.
2. ALL STONE CHECK DAMS SHALL BE MAINTAINED DURING CONSTRUCTION. ANY ACCUMULATED SILT OR DEBRIS SHALL BE REMOVED ONCE THE SITE IS STABILIZED.
3. STONE CHECK DAMS SHALL BE PLACED AS SHOWN ON THE SITE PLANS AND AT NO LESS THAN 75 FT. INTERVALS ALONG GRASSED SWALES #1A, #1B AND #1C.
4. ALL STONE CHECK DAMS SHALL BE LEFT IN PLACE PERMANENTLY.

STONE CHECK DAM DETAIL
NOT TO SCALE

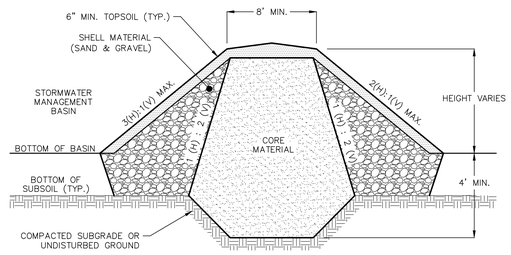

GRADATION TABLES

SHELL MATERIAL		CORE MATERIAL	
SIEVE SIZE	% PASS	SIEVE SIZE	% PASS
5"	10	No. 10	100
3/4"	50–100	No. 40	75–100
No. 4	25–75	No. 200	40–100

FRACTION PASSING No. 4 SHALL HAVE LESS THAN 15% PASSING NO. 200 SIEVE

NOTES:
1. ALL MATERIALS SHALL BE COMPACTED TO AT LEAST 95% MODIFIED OPTIMUM DENSITY.
2. ENTIRE BERM AND SURROUNDING DISTURBED AREAS SHALL BE COMPLETELY STABILIZED AND SEEDED WITH EROSION CONTROL/RESTORATION MIX.
3. IT IS RECOMMENDED THAT THE BERM BE CONSTRUCTED IN THE SUMMER MONTHS IF POSSIBLE SINCE THE CORE MATERIALS WILL BE DIFFICULT TO PLACE AND COMPACT IF THEY BECOME WET.
4. CONSTRUCTION OF THE DETENTION BASIN BERM SHALL BE SUPERVISED AND INSPECTED BY THE DESIGN ENGINEER. CORE COMPACTION TESTS AND SIEVE ANALYSIS TESTS SHALL BE PERFORMED TO DEMONSTRATE CONFORMANCE TO BERM SPECIFICATIONS. ALL TEST RESULTS SHALL BE PROVIDED TO THE DESIGN ENGINEER.
5. ANTI–SEEP COLLAR SHALL BE INSTALLED AROUND OUTLET PIPE AS NECESSARY.

WATER QUALITY BASIN BERM DETAIL
NOT TO SCALE

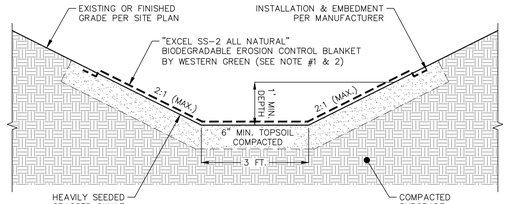

NOTES:
1. THE SWALE SHALL HAVE AN "EXCEL SS–2 ALL NATURAL" BIODEGRADABLE EROSION CONTROL BLANKET BY WESTERN GREEN (OR EQUIVALENT). THE LINER SHALL BE INSTALLED 1 FT. (MIN.) ABOVE THE BOTTOM OF THE SWALE.
2. THE EROSION CONTROL BLANKET SHALL MEET OR EXCEED "TYPE 2.D" FOR FEDERAL HIGHWAY ADMINISTRATION ROLLED EROSION CONTROL PRODUCTS, INCLUDING SHEAR STRENGTH AND LONGEVITY.
3. THE SWALE AND ALL DISTURBED AREAS SHALL BE HEAVILY SEEDED IN CONFORMANCE WITH THE PERMANENT SEED MIXTURE (SEE SHEET 3 OF 13) AFTER GRADING IS COMPLETED AND PRIOR TO THE INSTALLATION OF THE EROSION CONTROL BLANKET.
4. THE MAT SHALL BE INSTALLED IN STRICT CONFORMANCE WITH WITH ALL REQUIREMENTS AND SPECIFICATIONS PROVIDED BY THE MANUFACTURER.
5. THE MAT SHALL BE SECURELY ANCHORED INTO THE SOIL AT ALL TRAILING EDGES. THE MAT SHALL BE FASTENED TO THE SOIL, WITH WOOD STAKES AND METAL STAPLES, OR AS OTHERWISE RECOMMENDED BY THE MANUFACTURER.
6. THE SWALE SHALL HAVE PERMENENT CHECK DAMS INSTALLED (NO SHOWN) – SEE DETAIL.

GRASSED SWALE #1A WITH EROSION CONTROL BLANKET DETAIL
NOT TO SCALE

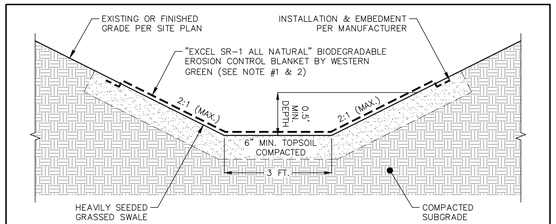

NOTES:
1. THE SWALE SHALL HAVE AN "EXCEL SR–1 ALL NATURAL" BIODEGRADABLE EROSION CONTROL BLANKET BY WESTERN GREEN (OR EQUIVALENT). THE LINER SHALL BE INSTALLED 1 FT. (MIN.) ABOVE THE BOTTOM OF THE SWALE.
2. THE EROSION CONTROL BLANKET SHALL MEET OR EXCEED "TYPE 2.C" FOR FEDERAL HIGHWAY ADMINISTRATION ROLLED EROSION CONTROL PRODUCTS, INCLUDING SHEAR STRENGTH AND LONGEVITY.
3. THE SWALE AND ALL DISTURBED AREAS SHALL BE HEAVILY SEEDED IN CONFORMANCE WITH THE PERMANENT SEED MIXTURE (SEE SHEET 3 OF 13) AFTER GRADING IS COMPLETED AND PRIOR TO THE INSTALLATION OF THE EROSION CONTROL BLANKET.
4. THE MAT SHALL BE INSTALLED IN STRICT CONFORMANCE WITH WITH ALL REQUIREMENTS AND SPECIFICATIONS PROVIDED BY THE MANUFACTURER.
5. THE MAT SHALL BE SECURELY ANCHORED INTO THE SOIL AT ALL TRAILING EDGES. THE MAT SHALL BE FASTENED TO THE SOIL, WITH WOOD STAKES AND METAL STAPLES, OR AS OTHERWISE RECOMMENDED BY THE MANUFACTURER.
6. THE SWALE SHALL HAVE PERMENENT CHECK DAMS INSTALLED (NO SHOWN) – SEE DETAIL.

GRASSED SWALE #1B & #1C WITH EROSION CONTROL BLANKET DETAIL
NOT TO SCALE

PLAN PREPARED BY:
INDIGO LAND DESIGN, LLC
JOSEPH VREN, P.E.
CT REG. NO. 21090
40 ELM STREET, 2ND FLOOR
OLD SAYBROOK, CT 06475
PHONE: (860) 388-9343
WEB: INDIGO-LAND.COM

NOT FOR CONSTRUCTION UNTIL THIS NOTE IS REMOVED

#	DATE	DESCRIPTION		
2	7/23/2024	REVISIONS PER TOWN COMMENTS, MISC.	RG	
1	7/17/2024	REVISIONS PER TOWN COMMENTS, MISC.	RG	BK

CONSTRUCTION DETAILS (STORMWATER AND E&S CONTROL)

PREPARED FOR 1721, LLC
430 MOHEGAN AVENUE PARKWAY & 23B OLD NORWICH ROAD
TAX MAP 76 LOTS 10164 & 5600
WATERFORD, CONNECTICUT

DATE: MAY 21, 2024
SCALE: AS NOTED
DRAWN BY: CO, MA, RG, RM
CHECKED BY: JW
DWG. NO.: CD-1
SHEET NO.: 8 of 13
JOB. NO.: 2023-922

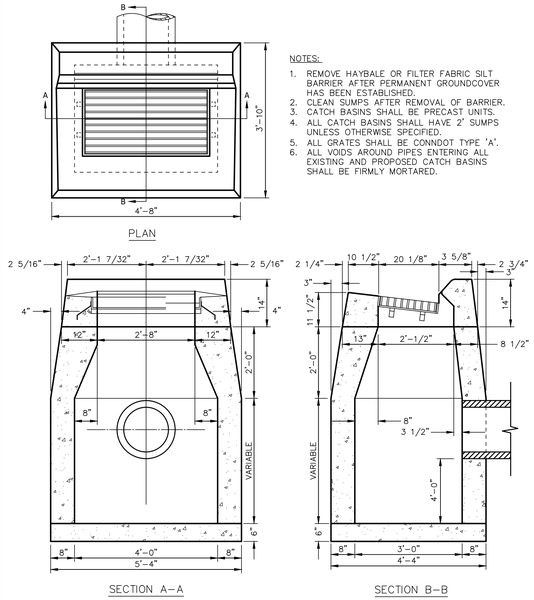

NOTES:

1. REMOVE HAYBALE OR FILTER FABRIC SILT BARRIER AFTER PERMANENT GROUNDCOVER HAS BEEN ESTABLISHED.
2. CLEAN SUMPS AFTER REMOVAL OF BARRIER.
3. CATCH BASINS SHALL BE PRECAST UNITS.
4. ALL CATCH BASINS SHALL HAVE 2' SUMPS UNLESS OTHERWISE SPECIFIED.
5. ALL GRATES SHALL BE CONNDOT TYPE 'A'.
6. ALL VOIDS AROUND PIPES ENTERING ALL EXISTING AND PROPOSED CATCH BASINS SHALL BE FIRMLY MORTARED.

TYPE "CAPE COD" CURB CATCH BASIN DETAIL

NOT TO SCALE

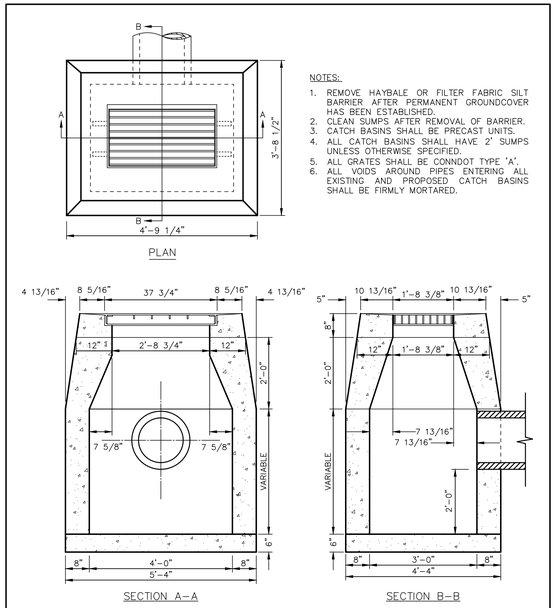

NOTES:

1. REMOVE HAYBALE OR FILTER FABRIC SILT BARRIER AFTER PERMANENT GROUNDCOVER HAS BEEN ESTABLISHED.
2. CLEAN SUMPS AFTER REMOVAL OF BARRIER.
3. CATCH BASINS SHALL BE PRECAST UNITS.
4. ALL CATCH BASINS SHALL HAVE 2' SUMPS UNLESS OTHERWISE SPECIFIED.
5. ALL GRATES SHALL BE CONNDOT TYPE 'A'.
6. ALL VOIDS AROUND PIPES ENTERING ALL EXISTING AND PROPOSED CATCH BASINS SHALL BE FIRMLY MORTARED.

TYPE "C–L" CATCH BASIN DETAIL

NOT TO SCALE

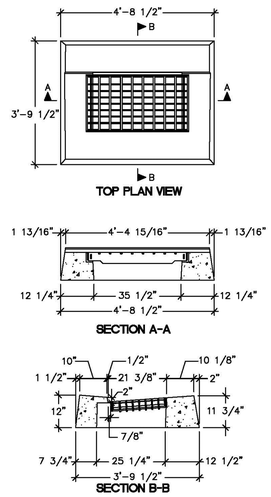

CAPE COD CATCH BASIN TOP

DESIGN COMFORMS TO STATE AND LOCAL SPECIFICATIONS.

DESIGN NOTES:

1. REINFORCING STEEL CONFORMS TO LATEST ASTM SPECIFICATION A185.
2. CONCRETE COMPRESSIVE STRENGTH– 4000 PSI AT 28 DAYS.
3. METHOD OF MANUFACTURE: WET CAST.
4. SECTION IS MONOLITHIC.

WEIGHT CHART

PRODUCT	APPROX WEIGHT
CAPE COD CURB TOP	1400 LBS.

UNITED CONCRETE 'CAPE COD' CATCH BASIN TOP

NOT TO SCALE

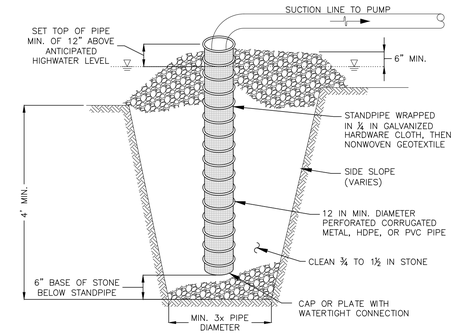

ELEVATION

CONSTRUCTION SPECIFICATIONS

1. USE 12 INCH OR LARGER DIAMETER CORRUGATED METAL, HDPE, OR PVC PIPE WITH 1 INCH DIAMETER PERFORATIONS, 6 INCHES ON CENTER. BOTTOM OF PIPE MUST BE CAPPED WITH WATERTIGHT SEAL.
2. WRAP PIPE WITH ¼ INCH GALVANIZED HARDWARE CLOTH AND WRAP NONWOVEN GEOTEXTILE, AS SPECIFIED IN SECTION H–1 MATERIALS, OVER THE HARDWARE CLOTH.
3. EXCAVATE PIT TO THREE TIMES THE PIPE DIAMETER AND FOUR FEET IN DEPTH. PLACE ¾ TO 1½ INCH STONE OR EQUIVALENT RECYCLED CONCRETE, 6 INCHES IN DEPTH PRIOR TO PIPE PLACEMENT.
4. SET TOP OF PIPE MINIMUM 12 INCHES ABOVE WATER SURFACE ELEVATION.
5. BACKFILL PIT AROUND THE PIPE WITH ¾ TO 1½ INCH CLEAN STONE OR EQUIVALENT RECYCLED CONCRETE AND EXTEND STONE A MINIMUM OF 6 INCHES ABOVE ANTICIPATED WATER SURFACE ELEVATION.
6. DISCHARGE TO A STABLE AREA AT A NONEROSIVE RATE.
7. A SUMP PIT REQUIRES FREQUENT MAINTENANCE. IF SYSTEM CLOGS, REMOVE PERFORATED PIPE AND REPLACE GEOTEXTILE AND STONE. KEEP POINT OF DISCHARGE FREE OF EROSION.

* THIS DETAIL ONLY REQUIRED FOR DEWATERING DURING CONSTRUCTION IF SHALLOW GROUNDWATER IS ENCOUNTERED.

SUMP PIT DETAIL

NOT TO SCALE

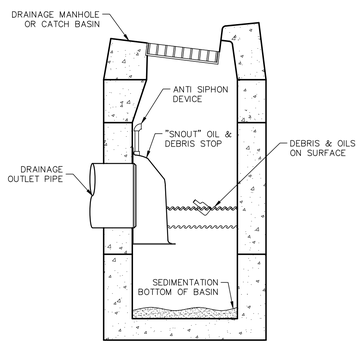

NOTE:

1. "SNOUT" OIL AND DEBRIS STOP MANUFACTURED BY: BMP, INC. LYME CONNECTICUT OR EQUAL.

CATCH BASIN HOOD DETAIL

NOT TO SCALE

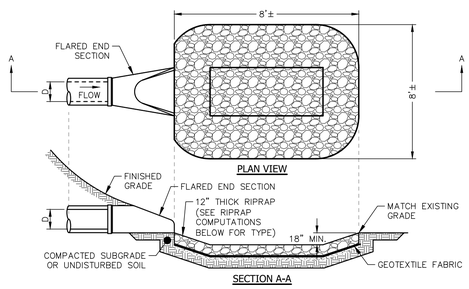

NOTE: PLUNGE POOL TO BE INSTALLED LEVEL. THE OUTLET INVERT OF THE FLARED END SECTION SHALL MATCH THE EXISTING GRADE ELEVATION AT THE DOWNSTREAM END.

RIPRAP PLUNGE POOL DETAIL

NOT TO SCALE

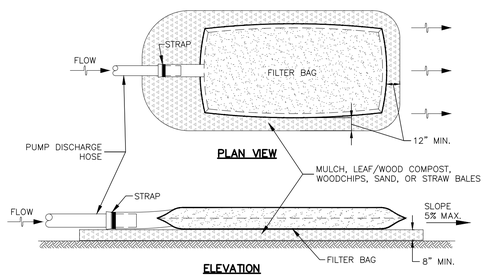

CONSTRUCTION SPECIFICATIONS

1. TIGHTLY SEAL SLEEVE AROUND THE PUMP DISCHARGE HOSE WITH A STRAP OR SIMILAR DEVICE.
2. PLACE FILTER BAG ON SUITABLE BASE (E.G., MULCH, LEAF/WOOD COMPOST, WOODCHIPS, SAND, OR STRAW BALES) LOCATED ON A LEVEL OR 5% MAXIMUM SLOPING SURFACE. DISCHARGE TO A STABILIZED AREA. EXTEND BASE A MINIMUM OF 12 INCHES FROM EDGES OF BAG.
3. CONTROL PUMPING RATE TO PREVENT EXCESSIVE PRESSURE WITHIN THE FILTER BAG IN ACCORDANCE WITH THE MANUFACTURER RECOMMENDATIONS. AS THE BAG FILLS WITH SEDIMENT, REDUCE PUMPING RATE.
4. REMOVE AND PROPERLY DISPOSE OF FILTER BAG UPON COMPLETION OF PUMPING OPERATIONS OR AFTER BAG HAS REACHED CAPACITY, WHICHEVER OCCURS FIRST. SPREAD THE DEWATERED SEDIMENT FROM THE BAG IN AN APPROVED UPLAND AREA AND STABILIZE WITH SEED AND MULCH BY THE END OF THE WORK DAY. RESTORE THE SURFACE AREA BENEATH THE BAG TO ORIGINAL CONDITION UPON REMOVAL OF THE DEVICE.
5. USE NONWOVEN GEOTEXTILE WITH DOUBLE STITCHED SEAMS USING HIGH STRENGTH THREAD. SIZE SLEEVE TO ACCOMMODATE A MAXIMUM 4 INCH DIAMETER PUMP DISCHARGE HOSE. THE BAG MUST BE MANUFACTURED FROM A NONWOVEN GEOTEXTILE THAT MEETS OR EXCEEDS MINIMUM AVERAGE ROLL VALUES (MARV) FOR THE FOLLOWING:

GRAB TENSILE	250 LB	ASTM D–4632
PUNCTURE	150 LB	ASTM D–4833
FLOW RATE	70 GAL/MIN/FT^2	ASTM D–4491
PERMITTIVITY (SEC^{-1})	1.2 SEC^{-1}	ASTM D–4491
UV RESISTANCE	70% STRENGTH @ 500 HOURS	ASTM D–4355
APPARENT OPENING SIZE (AOS)	0.15–0.18 MM	ASTM D–4751
SEAM STRENGTH	90%	ASTM D–4632

6. REPLACE FILTER BAG IF BAG CLOGS OR HAS RIPS, TEARS, OR PUNCTURES. DURING OPERATION KEEP CONNECTION BETWEEN PUMP HOSE AND FILTER BAG WATER TIGHT. REPLACE BEDDING IF IT BECOMES DISPLACED.

* FILTER BAG SHALL BE PLACED NO CLOSER THAN 25' TO ANY WETLAND AREA OR DOWNGRADIENT PROPERTY LINE.

* THIS DETAIL ONLY REQUIRED FOR DEWATERING DURING CONSTRUCTION IF SHALLOW GROUNDWATER IS ENCOUNTERED.

FILTER BAG DETAIL

NOT TO SCALE

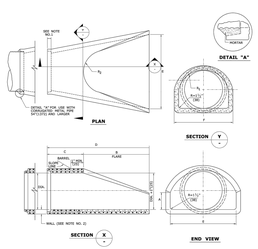

DIMENSIONS FOR REINFORCED CONCRETE PIPE END									FLARE REINFORCEMENT ONE LAYER ONLY IN CENTER OF WALL	
DIA.	A	B	C	D	E	F	R_1	R_2	MIN. AREA OF LONGITUDINAL STEEL SQ. IN. PER FT.	MIN. AREA OF TRANSVERSE STEEL SQ. IN. PER FT.
12"(305)	4"(102)	2'-0"(610)	4'-0 7/8"(1241)	6'-0 7/8"(1851)	2'-0"(610)	1'-7 15/16"(506)	10 1/4"(260)	9"(229)	0.048	0.048
15"(381)	6"(152)	2'-3"(686)	3'-10"(1168)	6'-1"(1854)	2'-6"(762)	2'-0 5/16"(618)	1'-0 1/2"(318)	11"(279)	0.054	0.054
18"(457)	9"(229)	2'-3"(686)	3'-10"(1168)	6'-1"(1854)	3'-0"(914)	2'-5"(737)	1'-3 1/2"(394)	1'-0"(305)	0.060	0.060
21"(533)	9"(229)	2'-11"(889)	3'-2"(965)	6'-1"(1854)	3'-6"(1067)	2'-7 1/2"(800)	1'-4"(406)	1'-1"(330)	0.066	0.066
24"(610)	9 1/2"(241)	3'-7 1/2"(1105)	2'-6"(762)	6'-1 1/2"(1867)	4'-0"(1219)	2'-9 3/16"(843)	1'-4 13/16"(427)	1'-2"(356)	0.072	0.072
30"(762)	1'-0"(305)	4'-6"(1371)	1'-7 1/2"(502)	6'-1 3/4"(1873)	5'-0"(1524)	3'-1"(940)	1'-6 1/2"(470)	1'-3"(381)	0.084	0.084
36"(914)	1'-3"(381)	5'-3"(1600)	2'-10 3/4"(883)	8'-1 3/4"(2483)	6'-0"(1829)	3'-11 15/16"(1214)	2'-0 5/16"(618)	1'-8"(508)	0.096	0.096
42"(1067)	1'-9"(534)	5'-3"(1600)	2'-11"(889)	8'-2"(2489)	6'-6"(1981)	4'-5 7/8"(1368)	2'-3 1/2"(699)	1'-10"(559)	0.108	0.108
48"(1219)	2'-0"(610)	6'-0"(1829)	2'-2"(660)	8'-2"(2489)	7'-0"(2134)	4'-8 1/2"(1435)	2'-4 1/2"(724)	1'-10"(559)	0.120	0.120
54"(1372)	2'-3"(686)	5'-5"(1651)	2'-11"(889)	8'-4"(2540)	7'-6"(2286)	5'-5 1/2"(1664)	2'-9 1/8"(841)	2'-0"(610)	0.132	0.132
60"(1524)	2'-9"(838)	5'-0"(1524)	3'-3"(991)	8'-3"(2515)	8'-0"(2438)	6'-0 1/2"(1842)	3'-0 11/16"(932)	2'-0"(610)	0.144	0.144

FLARED END REINFORCED CONCRETE PIPE

NOT TO SCALE

PLAN PREPARED BY:
INDIGO LAND DESIGN, LLC
JOSEPH VREN, P.E.
CT REG. NO. 21090
40 ELM STREET, 2ND FLOOR
OLD SAYBROOK, CT 06475
PHONE: (860) 388-9343
WEB: INDIGO-LAND.COM

NOT FOR CONSTRUCTION UNTIL THIS NOTE IS REMOVED

#	DATE	DESCRIPTION		BY
2	7/23/2024	REVISIONS PER TOWN COMMENTS, MISC.	RC	
1	7/11/2024	REVISIONS PER TOWN COMMENTS, MISC.	RG	

CONSTRUCTION DETAILS (STORMWATER AND E&S CONTROL)

PREPARED FOR 1721, LLC
430 MOHEGAN AVENUE PARKWAY & 23B OLD NORWICH ROAD
TAX MAP 76 LOTS 10164 & 5600
WATERFORD, CONNECTICUT

DATE: MAY 21, 2024
SCALE: AS NOTED
DRAWN BY: CO, MA, RG, RM
CHECKED BY: JW
DWG. NO.: CD-2
SHEET NO.: 9 of 13
JOB. NO.: 2023-922

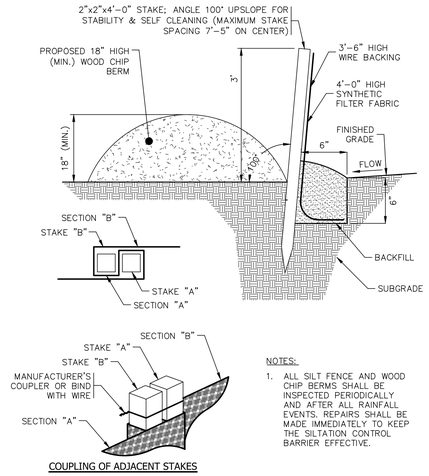

COUPLING OF ADJACENT STAKES

NOTES:

1. ALL SILT FENCE AND WOOD CHIP BERMS SHALL BE INSPECTED PERIODICALLY AND AFTER ALL RAINFALL EVENTS. REPAIRS SHALL BE MADE IMMEDIATELY TO KEEP THE SILTATION CONTROL BARRIER EFFECTIVE.

SILT FENCE BARRIER WITH WOOD CHIP BERM DETAIL

NOT TO SCALE

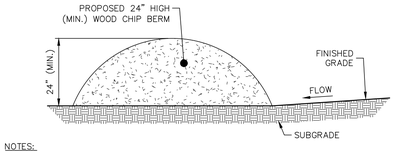

NOTES:

1. ALL WOOD CHIP BERMS SHALL BE INSPECTED PERIODICALLY AND AFTER ALL RAINFALL EVENTS. REPAIRS SHALL BE MADE IMMEDIATELY TO KEEP THE SILTATION CONTROL BARRIER EFFECTIVE.

WOOD CHIP BERM DETAIL

NOT TO SCALE

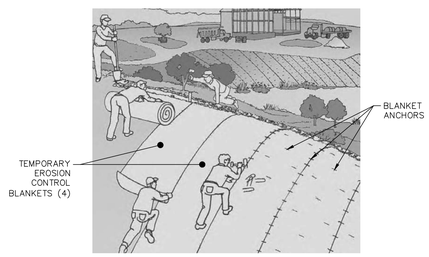

NOTES:

1. CONTRACTOR SHALL PREPARE SURFACE, REMOVE PROTRUDING OBJECTS AND INSTALL TEMPORARY EROSION CONTROL BLANKETS IN ACCORDANCE WITH MANUFACTURER'S RECOMMENDATIONS AND SPECIFICATIONS.
2. CONTRACTOR SHALL ENSURE THE ORIENTATION AND ANCHORING OF THE BLANKET IS APPROPRIATE FOR THE SITE.
3. CONTRACTOR SHALL INSPECT THE TEMPORARY EROSION CONTROL BLANKET AT LEAST ONCE A WEEK AND WITHIN 24 HOURS OF THE END OF A STORM WITH RAINFALL OF 0.5 INCHES OR MORE. IF WASHOUT OR BREAKOUT OCCURS, CONTRACTOR SHALL RE-INSTALL THE BLANKET AFTER REGRADING AND RE-SEEDING THE AREA.
4. EROSION CONTROL BLANKETS SHALL BE APPLIED TO ALL CUT OR FILL SLOPES STEEPER THAN 3:1 (H:V) OR AS OTHERWISE NOTED ON THE SITE PLANS.

EROSION CONTROL BLANKET DETAIL

NOT TO SCALE

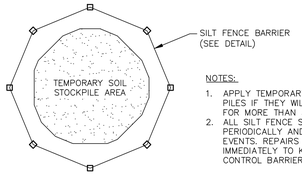

PLAN VIEW

NOTES:

1. APPLY TEMPORARY SEED MIXTURE TO PILES IF THEY WILL NOT BE DISTURBED FOR MORE THAN 30 DAYS.
2. ALL SILT FENCE SHALL BE INSPECTED PERIODICALLY AND AFTER ALL RAINFALL EVENTS. REPAIRS SHALL BE MADE IMMEDIATELY TO KEEP THE SILTATION CONTROL BARRIER EFFECTIVE.

STOCKPILE SILTATION CONTROL DETAIL

NOT TO SCALE

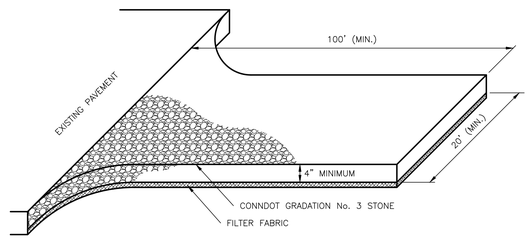

NOTES:

1. REMOVE TOPSOIL AND ORGANICS BEFORE PLACING FILTER FABRIC AND ANGULAR STONE.
2. REDRESS STONE THROUGHOUT CONSTRUCTION AS NEEDED.

CONSTRUCTION ENTRANCE DETAIL

NOT TO SCALE

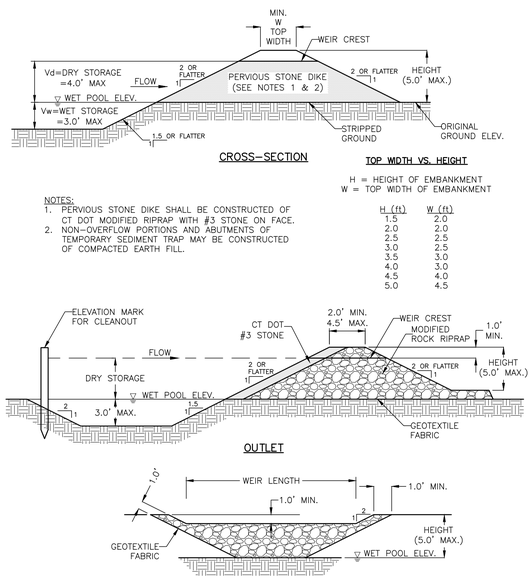

CROSS-SECTION

TOP WIDTH VS. HEIGHT

H = HEIGHT OF EMBANKMENT
W = TOP WIDTH OF EMBANKMENT

H (ft)	W (ft)
1.5	2.0
2.0	2.0
2.5	2.5
3.0	2.5
3.5	3.0
4.0	3.0
4.5	4.0
5.0	4.5

NOTES:

1. PERVIOUS STONE DIKE SHALL BE CONSTRUCTED OF CT DOT MODIFIED RIPRAP WITH #3 STONE ON FACE.
2. NON-OVERFLOW PORTIONS AND ABUTMENTS OF TEMPORARY SEDIMENT TRAP MAY BE CONSTRUCTED OF COMPACTED EARTH FILL.

OUTLET

NOTE:

TYPICALLY, SEDIMENT TRAPS ARE REQUIRED FOR ANY DISCHARGE POINT THAT SERVES AN AREA BETWEEN 2 AND 5 DISTURBED ACRES OF LAND. ALL TEMPORARY SEDIMENT TRAPS SHALL BE DESIGNED IN CONFORMANCE WITH THE "CONNECTICUT GUIDELINES FOR SOIL EROSION AND SEDIMENT CONTROL", PUBLISHED: SEPTEMBER 30, 2023 OR AS AMENDED, EFFECTIVE: MARCH 30, 2024. GENERALLY, TEMPORARY SEDIMENT TRAPS SHALL BE SIZED TO PROVIDE A MINIMUM OF 134 CUBIC YARDS OF WATER STORAGE PER ACRE DRAINED. ALL TEMPORARY SEDIMENT TRAPS SHALL BE MAINTAINED TO ASSURE EFFICIENT OPERATION UNTIL THE CONTRIBUTING AREA IS COMPLETELY STABILIZED. TEMPORARY SEDIMENT TRAPS MAY BE RELOCATED DURING CONSTRUCTION TO ACCOMMODATE PHASING. CONTRACTOR SHALL REVIEW LOCATIONS OF TEMPORARY SEDIMENT TRAPS WITH DESIGN ENGINEER PRIOR TO INSTALLATION. NO TEMPORARY SEDIMENT TRAP SHALL HAVE MORE THAN 5 ACRES OF DISTURBED LAND CONTRIBUTING TO IT.

TEMPORARY SEDIMENT TRAP DETAIL

NOT TO SCALE

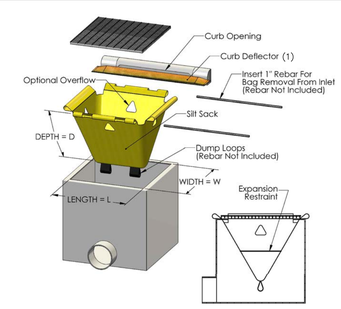

NOTE:

1. CURB DEFLECTOR IS ONLY REQUIRED FOR TYPE 'CAPE COD' CATCH BASINS.

CATCH BASIN INLET PROTECTION – SILT SACK DETAIL

NOT TO SCALE

G:\dwgs\10232HDETAILS\DETAIL41.dwg, 12/28/2005 8:35:17 AM, jdw

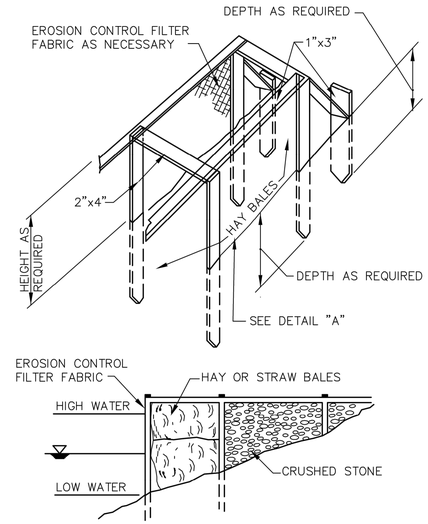

DETAIL "A"

HAY BALE/SILT FENCE SYSTEM FOR SEDIMENTATION BASINS (END SHOWN – RUN SIMILAR)

NOT TO SCALE

WATERFORD UTILITY COMMISSION TOWN OF WATERFORD, CT STANDARD DETAILS		DETAIL: 2 DATE: JAN 2006

G:\dwgs\10232HDETAILS\DETAIL02.dwg, 12/27/2005 1:51:23 PM, jdw

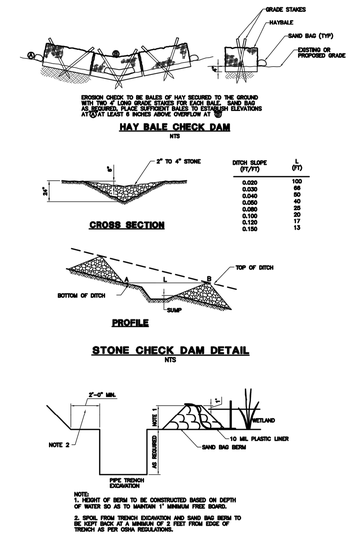

WATERFORD UTILITY COMMISSION TOWN OF WATERFORD, CT STANDARD DETAILS		DETAIL: 1B DATE: JAN 2006

G:\dwgs\10232HDETAILS\DETAIL1B.dwg, 12/28/2005 10:19:10 AM, jdw

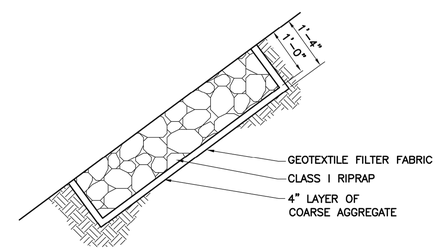

RIPRAP SLOPE PROTECTION SECTION

NTS

WATERFORD UTILITY COMMISSION TOWN OF WATERFORD, CT STANDARD DETAILS		DETAIL: 41 DATE: JAN 2006

G:\dwgs\10232HDETAILS\DETAIL1A.dwg, 12/28/2005 10:08:27 AM, jdw

EROSION AND SEDIMENTATION CONTROL NOTES

THIS PLAN HAS BEEN DEVELOPED AS A STRATEGY TO CONTROL SOIL EROSION AND SEDIMENTATION DURING AND AFTER CONSTRUCTION. THIS PLAN IS BASED ON THE "2002 CONNECTICUT GUIDELINES FOR SOIL EROSION AND SEDIMENT CONTROL" BY THE CONNECTICUT COUNCIL ON SOIL AND WATER CONSERVATION IN ACCORDANCE WITH THE CONNECTICUT DEPARTMENT OF ENVIRONMENTAL PROTECTION.

THE PROPOSED LOCATIONS OF EROSION AND EROSION CONTROL MEASURES REQUIRED ARE SHOWN ON THE SITE GRADING AND LAYOUT PLAN. REFER TO DWG CV-5. PROVIDE SILT FENCE, STONE CHECK DAMS AND OTHER EROSION CONTROL MEASURES AS REQUIRED TO ADEQUATELY PREVENT SEDIMENT TRANSPORT AS NOTED IN THE EMP.

1. ALL SEDIMENT AND EROSION CONTROL MEASURES SHALL BE DONE IN ACCORDANCE WITH THE "2002 CONNECTICUT GUIDELINES FOR SOIL EROSION AND SEDIMENT CONTROL", PUBLISHED BY THE CONNECTICUT COUNCIL ON SOIL AND WATER CONSERVATION IN ACCORDANCE WITH THE CONNECTICUT DEPARTMENT OF ENVIRONMENTAL PROTECTION.
2. THOSE AREAS UNDERGOING ACTIVE CONSTRUCTION WILL BE MAINTAINED IN ACCORDANCE WITH THE CONNECTICUT GUIDELINES FOR SOIL EROSION AND SEDIMENT CONTROL. AREAS TO BE RESHAPED SHALL BE PERMANENTLY STABILIZED WITHIN 15 DAYS OF FINAL GRADING AND TEMPORARILY STABILIZED WITHIN 30 DAYS OF INITIAL DISTURBANCE OF THE SOIL.
3. SEDIMENT BARRIERS (SILT FENCE, STONE CHECK DAMS, ETC.) SHOULD BE INSTALLED PRIOR TO ANY SOIL DISTURBANCE OF UPGRADIENT DRAINAGE AREAS.
4. INSTALL SILT FENCE AT TOE OF SLOPES TO FILTER SILT FROM RUNOFF. SEE SILT FENCE DETAIL FOR PROPER INSTALLATION. SILT FENCE WILL REMAIN IN PLACE PER NOTE #8.
5. ALL EROSION CONTROL STRUCTURES WILL BE INSPECTED, REPLACED AND/OR REPAIRED EVERY 7 DAYS AND IMMEDIATELY FOLLOWING ANY SIGNIFICANT RAINFALL OR SNOW MELT OR WHEN NO LONGER SERVICEABLE DUE TO SEDIMENT BUILDUP. SEDIMENT CONTROL BARRIERS WITH SEDIMENT MUST BE REGRADED WHEN SEDIMENT REACHES APPROXIMATELY ONE HALF THE HEIGHT OF THE BARRIER. SEDIMENT CONTROL DEVICES SHALL REMAIN IN PLACE AND BE MAINTAINED BY THE CONTRACTOR UNTIL AREAS UPHILL ARE PERMANENTLY STABILIZED.
6. NO SLOPES, EITHER PERMANENT OR TEMPORARY, SHALL BE STEEPER THAN 2 HORIZONTAL TO 1 VERTICAL (2 TO 1) UNLESS STABILIZED WITH PERMANENT EROSION CONTROL MEASURES.
7. IF FINAL SEEDING OF THE DISTURBED AREAS IS NOT TO BE COMPLETED 30 DAYS PRIOR TO THE ANTICIPATED DATE OF THE FIRST KILLING FROST, USE TEMPORARY MULCHING (DORMANT SEEDING MAY BE ATTEMPTED AS WELL) TO PROTECT THE SITE AND DELAY PERMANENT SEEDING, UNTIL UPGRADIENT AREAS ARE STABILIZED.
8. WHEN FEASIBLE, TEMPORARY SEEDING OF DISTURBED AREAS THAT HAVE NOT BEEN FINISH GRADED SHALL BE COMPLETED 30 DAYS PRIOR TO THE FIRST KILLING FROST.
9. DURING THE CONSTRUCTION PHASE, INTERCEPTED SEDIMENT WILL BE RETURNED TO THE SITE AND REGRADED OVER OPEN AREAS. POOR SEEDING SEDIMENT, IF ANY, WILL BE DISPOSED OF IN AN ACCEPTABLE MANNER.
10. REVEGETATION MEASURES WILL COMMENCE UPON COMPLETION OF CONSTRUCTION EXCEPT AS NOTED ABOVE. ALL DISTURBED AREAS NOT OTHERWISE STABILIZED WILL BE GRADED, SMOOTHED, AND REVEGETATED AS FOLLOWS:
   A. A MINIMUM OF FOUR (4) INCHES OF LOAM WILL BE SPREAD OVER DISTURBED AREAS AND SMOOTHED TO A UNIFORM SURFACE.
   B. APPLY LIMESTONE AND FERTILIZER ACCORDING TO SOIL TEST. IF SOIL TESTING IS NOT DESIRED FEASIBLE ON SMALL OR VARIABLE SITES, OR WHERE TIMING IS CRITICAL, FERTILIZER MAY BE APPLIED AT THE RATE OF 300 POUNDS PER ACRE (690 LBS PER 1,000 SQ. FT.) OF 10-10-10 (N-P2O5-K2O) OR EQUIVALENT. APPLY GROUND LIMESTONE (EQUIVALENT TO SEE CALCIUM PLUS MAGNESIUM OXIDE) AT A RATE OF 4 TONS PER ACRE (180 LB PER 1,000 SQ. FT.) FOR CALY CLAY LOAM, AND HIGH ORGANIC SOIL AT A RATE OF 2 TONS PER ACRE (135 LBS PER 1,000 SQ. FT.) FOR SANDY LOAM, LOAM AND SILT LOAM. AT A RATE OF 2 TONS PER ACRE (90 LBS PER 1,000 SQ. FT) FOR LOAMY SAND, AND SAND.
   C. FOLLOWING SEED BED PREPARATION, DITCHES AND BACK SLOPES WILL BE SEEDED WITH A MIXTURE OF 47% CHEWINGS RED FESCUE, 8% BISTORT, AND 45% TALL FESCUE. THE LAWN AREAS WILL BE SEEDED WITH A PREMIUM TURF MIXTURE OF 45% KENTUCKY BLUEGRASS, 45% CHEWINGS RED FESCUE, AND 10% PERENNIAL RYE GRASS. SEEDING RATE IS 3.0 LBS PER 1,000 SQ. FT. LAWN QUALITY SOD MAY BE SUBSTITUTED FOR SEED.
   D. HAY MULCH AT THE RATE OF 2 TONS PER ACRE OR 90~95 LBS PER 1000 SQUARE FEET OR A HYDRO-APPLICATION OF CELLULOSE FIBER SHALL BE APPLIED FOLLOWING SEEDING. A SUITABLE BINDER SHALL BE USED ON HAY MULCH FOR WIND CONTROL.
11. ALL TEMPORARY EROSION CONTROL MEASURES SHALL BE REMOVED ONCE THE WORK AREA IS STABILIZED.
12. WETLANDS (EXCEPTING THOSE WHICH ARE TO BE FILLED IN ACCORDANCE WITH STATE AND FEDERAL REGULATIONS) WILL BE PROTECTED WITH SILT FENCE INSTALLED AT THE EDGE OF THE WETLAND OR THE BOUNDARY OF WETLAND DISTURBANCE.
13. IN GENERAL, AREAS WITHIN 100 FEET OF DELINEATED WETLANDS OR STREAMS SHALL HAVE A MAXIMUM PERIOD OF EXPOSURE OF NOT MORE THAN 15 DAYS.
14. FOLLOW APPROVED EROSION CONTROL MEASURES PRIOR TO EACH STORM IN ALL AREAS WITHIN 100 FEET OF DELINEATED WETLANDS OR STREAMS.

EROSION CONTROL DURING WINTER CONSTRUCTION

1. WINTER CONSTRUCTION PERIOD DEFINED: NOVEMBER 1 THROUGH APRIL 15
2. WINTER EXCAVATION AND EARTHWORK SHALL BE DONE SUCH THAT NO MORE THAN 1 ACRE OF THE SITE IS WITHOUT STABILIZATION AT ANY ONE TIME.
3. EXPOSED AREA SHOULD BE LIMITED TO THAT THAT CAN BE MULCHED IN ONE DAY PRIOR TO ANY PRECIPITATION EVENT.
4. AN AREA SHALL SHALL BE CONSIDERED TO HAVE BEEN STABILIZED WHEN EXPOSED SURFACES HAVE BEEN EITHER MULCHED WITH STRAW OR HAY AT A RATE OF 100 LB. PER 1,000 SQUARE FEET (WITH OR WITHOUT SEEDING) OR DORMANT SEEDED, MULCHED AND ADEQUATELY ANCHORED BY AN APPROVED ANCHORING TECHNIQUE. IN ALL CASES, MULCH SHALL BE APPLIED SUCH THAT SOIL SURFACE IS NOT VISIBLE THROUGH THE MULCH.
5. BETWEEN THE DATES OF OCTOBER 15 AND APRIL 15T, LOAM OR SEED WILL NOT BE REQUIRED. DURING PERIODS OF ABOVE-FREEZING TEMPERATURES, THE SLOPES SHALL BE FINE GRADED AND EITHER PROTECTED WITH MULCH OR TEMPORARILY SEEDED. PERMANENT SEEDING OR SOD MAY BE APPLIED. TREATMENT CAN BE APPLIED MULCHED, SHALL BE AFTER MOISTURE YES AND IF THE EXPOSED AREA HAS BEEN LOAMED, FINAL GRADED AND BE SMOOTH, THEN THE AREA MAY BE DORMANT SEEDED AT A RATE 200 – 300% HIGHER THAN SPECIFIED FOR PERMANENT SEED AND THEN MULCHED. IF CONSTRUCTION CONTINUES DURING FREEZING WEATHER, ALL EXPOSED AREAS SHALL BE GRADED BEFORE FREEZING AND THE SURFACE TEMPORARILY PROTECTED FROM EROSION BY THE APPLICATION OF MULCH. SLOPES SHALL NOT BE LEFT SUSPENDED UNLESS TREATED IN THE ABOVE MANNER. UNTIL SUCH TIME AS WEATHER CONDITIONS ALLOW EFFORTS TO BE RESUMED WITH THE PERMANENT SURFACE TREATMENT, EROSION SHALL BE CONTROLLED BY THE INSTALLATION OF BALES OF HAY OR STONE CHECK DAMS IN ACCORDANCE WITH THE STANDARD DETAILS.
6. A) BETWEEN THE DATES OF NOVEMBER 15T AND APRIL 15TH ALL MULCH MATERIALS SHALL BE ANCHORED WITHIN 24 HOURS PRIOR OR BE ANCHORED WITH MULCH NETTING OR ANALOGUE.
   B) MULCH NETTING SHALL BE USED TO ANCHOR MULCH IN ALL DRAINAGE WAYS WITH A SLOPE GREATER THAN 3%, FOR SLOPES EXPOSED TO DIRECT WINDS AND ALL SLOPES GREATER THAN 8%.
   C) MULCH NETTING SHALL BE USED TO ANCHOR MULCH IN ALL AREAS WITH SLOPES GREATER THAN 15%. BETWEEN OCTOBER 15TH, THE SAME APPLIES FOR ALL SLOPES GREATER THAN 8%.
7. AFTER NOVEMBER 15T THE CONTRACTOR SHALL APPLY DORMANT SEEDING OR MULCH AND ANCHORING ON ALL BARE EARTH AT THE END OF EACH WORKING DAY.
8. DURING WINTER CONSTRUCTION PERIODS ALL SNOW SHALL BE REMOVED FROM AREAS OF SEEDING AND MULCHING PRIOR TO PLACEMENT.

MULCH ANCHORING

ANCHOR MULCH WITH: MULCH NETTING (AS PER MANUFACTURER), ASPHALT EMULSION (500 GALLONS PER SQ. YD.), CHEMICAL TACK (AS PER MANUFACTURER'S SPECIFICATIONS), OR BE WOOD CELLULOSE FIBER (2000 LBS/ACRE). NETTING FOR SMALL AREAS AND ROAD DITCHES MAY BE PERMITTED.

MULCH AND MULCH ANCHORING

MULCH

LOCATION	MULCH	RATE (1000 S.F.)
PROTECTED AREA	STRAW OR HAY *	100 POUNDS
WINDY AREAS	STRAW OR HAY (ANCHORED) *	100 POUNDS
WOODCHIPS TO USE ON ROADWAYS OR STEEP SLOPES (GREATER THAN 3:1)	JUTE MESH, EXCELSIOR MAT OR EQUIV.	AS REQUIRED AS REQUIRED

* A HYDRO-APPLICATION OF CELLULOSE FIBER MAY BE APPLIED FOLLOWING SEEDING. A SUITABLE BINDER SHALL BE USED ON HAY MULCH FOR WIND CONTROL.

ADDITIONAL TEMPORARY SEED MIXTURE (FOR PERIODS LESS THAN 12 MONTHS)

DATES	SEED	RATE
3/1 – 8/15 8/16 – 9/15	OATS	86 LBS/ACRE
3/1 – 8/15 (8/1 – 10/15)	ANNUAL RYE GRASS	40 LBS/ACRE
8/16 – 7/1 (8/16 – 10/15)	WINTER RYE	120 LBS/ACRE
8/16 – 7/15	MILLET	30 LBS/ACRE

*SEED RATE ONLY

WATERFORD UTILITY COMMISSION TOWN OF WATERFORD, CT STANDARD DETAILS		DETAIL: 1A DATE: JAN 2006

PLAN PREPARED BY:
INDIGO LAND DESIGN, LLC
JOSEPH VIREN, P.E.
CT REG. NO. 21090
40 ELM STREET, 2ND FLOOR
OLD SAYBROOK, CT 06475
PHONE: (860) 388-9343
WEB: INDIGO-LAND.COM

NOT FOR CONSTRUCTION UNTIL THIS NOTE IS REMOVED

#	DATE	DESCRIPTION	BY
2	7/23/2024	REVISIONS PER TOWN COMMENTS, MISC.	RG
1	7/17/2024	REVISIONS PER TOWN COMMENTS, MISC.	RG

CONSTRUCTION DETAILS (STORMWATER AND E&S CONTROL)

PREPARED FOR 1721, LLC
430 MOHEGAN AVENUE PARKWAY & 23B OLD NORWICH ROAD
TAX MAP 76 LOTS 10164 & 5600
WATERFORD, CONNECTICUT

DATE: MAY 21, 2024
SCALE: AS NOTED
DRAWN BY: ⊠AMA, RG, RM
CHECKED BY: JW
DWG. NO.: CD-3
SHEET NO.: 10 of 13
JOB. NO.: 2023-922

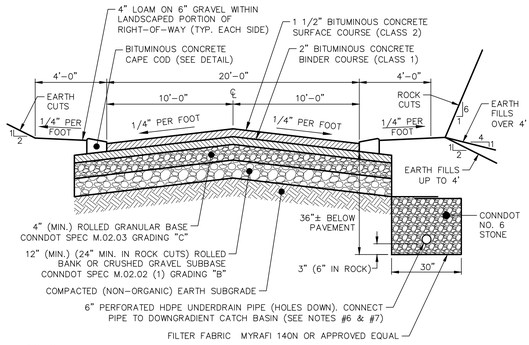

NOTES:
1. SUBBASE MUST BE SHAPED AND COMPACTED PRIOR TO THE PLACEMENT OF BASE.
2. ALL MATERIALS AND CONSTRUCTION METHODS SHALL CONFORM TO CONNECTICUT DOT STANDARD SPECIFICATIONS FOR ROADS, BRIDGES AND INCIDENTAL CONSTRUCTION FORM 818, 2020, OR AS AMENDED.
3. CONTRACTOR SHALL BE RESPONSIBLE TO VERIFY ADEQUATE SUBGRADE CONDITIONS PRIOR TO PLACEMENT OF SUBBASE.
4. IF SHALLOW LEDGE IS ENCOUNTERED, CONTRACTOR SHALL CONSULT WITH DESIGN ENGINEER TO MAKE APPROPRIATE ADJUSTMENTS.
5. CONTRACTOR SHALL PROVIDE SIEVE ANALYSES AND COMPACTION TESTING RESULTS FOR ALL BASE AND SUBBASE MATERIALS TO ENGINEER FOR REVIEW PRIOR TO PAVING.
6. UNDERDRAIN SHALL BE INSTALLED BETWEEN CATCH BASINS AS DIRECTED BY THE DESIGN ENGINEER.
7. IN NO CASE SHALL ANY UNDERDRAIN BE INSTALLED WITHIN 50 FEET OF ANY SEPTIC SYSTEM.

TYPICAL PRIVATE ROAD SECTION DETAIL
NOT TO SCALE

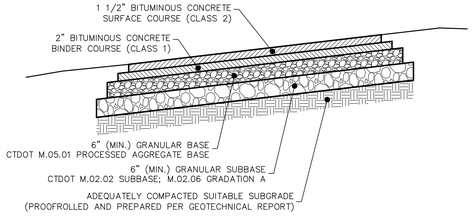

NOTES:
1. SUBBASE MUST BE SHAPED AND PROPERLY COMPACTED PRIOR TO THE PLACEMENT OF BASE.
2. ALL MATERIALS AND CONSTRUCTION METHODS SHALL CONFORM TO CONNECTICUT D.O.T. STANDARD SPECIFICATIONS.
3. COMPACTION OF ALL BASE AND SUBBASE MATERIALS SHALL MEET OR EXCEED 95% PROCTOR.
4. CONTRACTOR SHALL BE RESPONSIBLE FOR ALL MATERIALS AND COMPACTION TESTING AND SHALL SUBMIT DOCUMENTATION FOR REVIEW.
5. EXISTING EXCAVATED MATERIALS MAY BE REUSED FOR SUBBASE IF MATERIAL IS TESTED AND CONFIRMED TO BE IN SUBSTANTIAL CONFORMANCE WITH THE PROVIDED CONNDOT SPECIFICATIONS.
6. IF SHALLOW LEDGE IS ENCOUNTERED, CONTRACTOR SHALL CONSULT WITH DESIGN ENGINEER TO MAKE APPROPRIATE ADJUSTMENTS.

TYPICAL PAVEMENT SECTION DETAIL
NOT TO SCALE

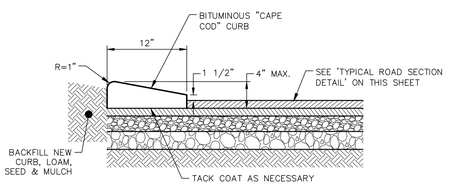

BITUMINOUS CONCRETE CAPE COD CURB DETAIL
NOT TO SCALE

NOTES:
1. STEEL FOR POSTS SHALL CONFORM TO THE MECHANICAL REQUIREMENTS OF ASTM A 499-81 GRADE 60 AND TO THE CHEMICAL REQUIREMENTS OF ASTM A1-76 CARBON STEEL TEE RAIL HAVING NOMINAL WEIGHT OF 91 LBS. OR GREATER PER LINEAR YARD. STEEL FOR DELINEATOR POSTS SHALL BE ASTM A36 STEEL.
2. AFTER FABRICATION, ALL STEEL POSTS SHALL BE GALVANIZED TO MEET THE REQUIREMENTS OF ASTM A 123.
3. ALL SIGN POSTS SHALL HAVE "BREAKAWAY" FEATURES THAT MEET AASHTO REQUIREMENTS CONTAINED IN "STANDARD SPECIFICATIONS FOR STRUCTURAL SUPPORTS FOR HIGHWAY SIGNS, LUMINARES AND TRAFFIC SIGNALS-1985." THE "BREAKAWAY" FEATURES SHALL BE STRUCTURALLY ADEQUATE TO CARRY THE SIGNS SHOWN IN THE PLANS AT 60 MPH WIND LOADINGS. INSTALLATIONS SHALL BE IN ACCORDANCE WITH MANUFACTURERS RECOMMENDATIONS.
4. TYPE A POSTS - 3 LB/FT TYPE B POSTS - 4 LB/FT.

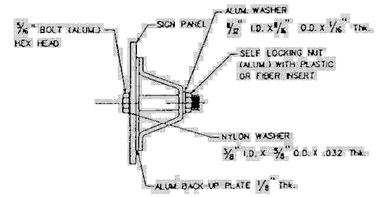

TYPICAL SIGN PANEL ATTACHMENT

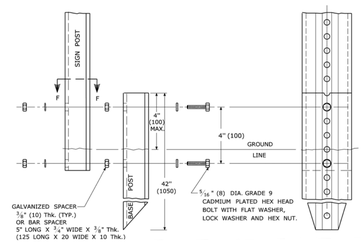

BREAKAWAY TYPE II INSTALLATION – FOR 3 & 4 LB POSTS

CT DOT BREAKAWAY POST DETAIL
NOT TO SCALE

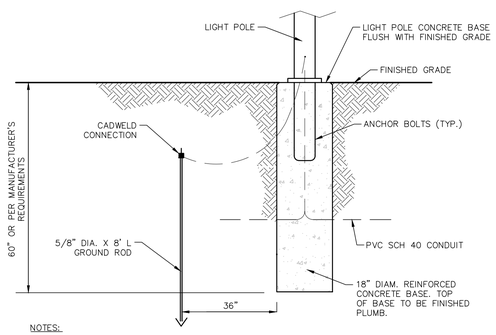

NOTES:
1. REFER TO ALL LIGHT POLE AND FIXTURE MANUFACTURER SPECIFICATIONS FOR ADDITIONAL INFORMATION. ALL MANUFACTURER REQUIREMENTS SUPERSEDE INFORMATION SHOWN IN THIS DETAIL.
2. CONCRETE BASES SHALL BE FLUSH WITH THE GROUND SURFACE. ALL LIGHT POLES SHALL BE LOCATED A MINIMUM OF 5 FEET FROM THE EDGE OF ANY PAVEMENT.

LIGHT POLE CONCRETE BASE DETAIL
NOT TO SCALE

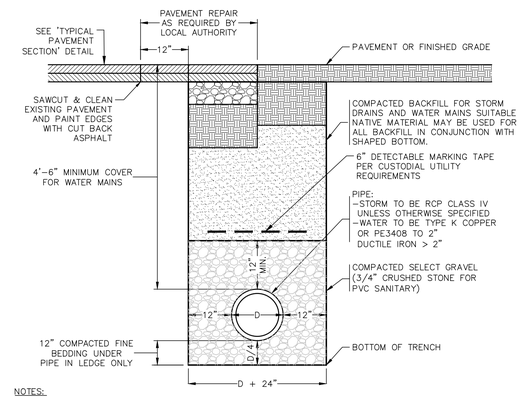

NOTES:
1. SELECT BACKFILL MATERIAL SHALL BE BANK-RUN GRAVEL GRADATION C, FORM 818, 2020, OR PROCESSED AGGREGATE CAN BE USED IN LIEU OF BANK-RUN GRAVEL OR APPROVED NATIVE MATERIAL.
2. ALL MATERIALS AND CONSTRUCTION METHODS SHALL CONFORM TO CONNECTICUT DOT STANDARD SPECIFICATIONS FOR ROADS, BRIDGES AND INCIDENTAL CONSTRUCTION FORM 818, 2020 OR AS AMENDED.
3. ALL UTILITIES SHALL BE INSTALLED IN ACCORDANCE WITH ALL CUSTODIAL UTILITY COMPANY SPECIFICATIONS.
4. ALL PROPOSED MATERIALS SHALL BE INSTALLED AS SHOWN OR AS APPROVED BY THE CUSTODIAL UTILITY COMPANY.

TYPICAL TRENCH DETAIL
NOT TO SCALE

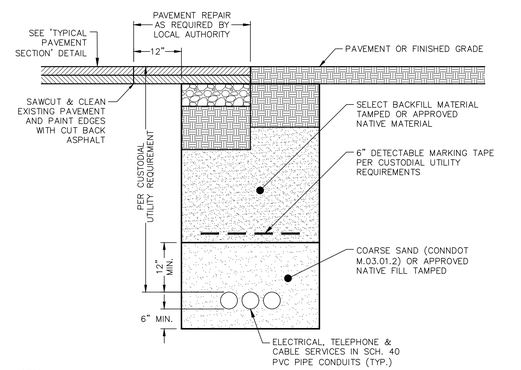

NOTES:
1. SELECT BACKFILL MATERIAL SHALL BE BANK-RUN GRAVEL GRADATION C, FORM 818, 2020, OR PROCESSED AGGREGATE CAN BE USED IN LIEU OF BANK-RUN GRAVEL OR APPROVED NATIVE MATERIAL.
2. ALL MATERIALS AND CONSTRUCTION METHODS SHALL CONFORM TO CONNECTICUT DOT STANDARD SPECIFICATIONS FOR ROADS, BRIDGES AND INCIDENTAL CONSTRUCTION FORM 818, 2020 OR AS AMENDED.
3. ALL UTILITIES SHALL BE INSTALLED IN ACCORDANCE WITH ALL CUSTODIAL UTILITY COMPANY SPECIFICATIONS.
4. ALL PROPOSED MATERIALS SHALL BE INSTALLED AS SHOWN OR AS APPROVED BY THE CUSTODIAL UTILITY COMPANY.

TYPICAL UNDERGROUND UTILITY TRENCH CROSS SECTION
NOT TO SCALE

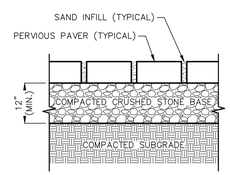

NOTES:
1. ALL JOINTS SHALL BE 3/4" OR GREATER.
2. ALL ORGANIC OR OTHER NON-FREE DRAINING MATERIAL SHALL BE REMOVED PRIOR TO PLACING GRAVEL BASE.
3. JOINTS SHALL NOT BE GROUTED OR CEMENTED.
4. A LEVELING SAND BASE UNDERNEATH THE PAVERS IS PERMISSIBLE.

PERVIOUS PAVER WALKWAY DETAIL
NOT TO SCALE

PLAN PREPARED BY:
INDIGO LAND DESIGN, LLC
JOSEPH VIREN, P.E.
CT REG. NO. 21090
40 ELM STREET, 2ND FLOOR
OLD SAYBROOK, CT 06475
PHONE: (860) 388-9343
WEB: INDIGO-LAND.COM

NOT FOR CONSTRUCTION UNTIL THIS NOTE IS REMOVED

#	DATE	DESCRIPTION	BY
2	7/23/2024	REVISIONS PER TOWN COMMENTS, MISC.	RG
1	7/17/2024	REVISIONS PER TOWN COMMENTS, MISC.	RG

CONSTRUCTION DETAILS (ROADWAY, WALKWAY & UTILITIES)

PREPARED FOR 1721, LLC
430 MOHEGAN AVENUE PARKWAY & 23B OLD NORWICH ROAD
TAX MAP 76 LOTS 10164 & 5600
WATERFORD, CONNECTICUT

DATE: MAY 21, 2024
SCALE: AS NOTED
DRAWN BY: CO, MA, RG, RM
CHECKED BY: JW
DWG. NO.: CD-4
SHEET NO.: 11 of 13
JOB. NO.: 2023-922

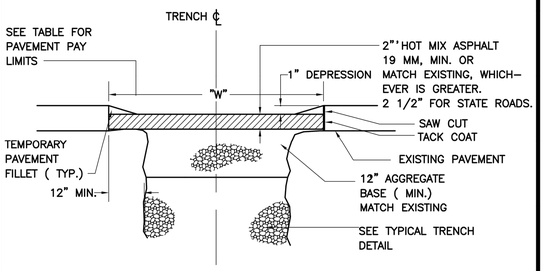

PAVEMENT PAY LIMITS	
PIPE I.D.	"W" (FOR 0' – 10' DEEP)
6" – 15"	7'–0"
16" – 21"	8'–0"

"W" SHALL BE INCREASED BY 1'–0" FOR TRENCHES 10' – 15', AND BY 2'–0" FOR TRENCHES 15' – 20' DEEP.

INITIAL TRENCH PAVING (WITHOUT OVERLAY)

WATERFORD UTILITY COMMISSION
TOWN OF WATERFORD, CT
STANDARD DETAILS

DETAIL: 37
DATE: JAN 2006

G:\dwgs\10232H\DETAILS\DETAIL37.dwg, 12/28/2005 8:23:27 AM, jdw

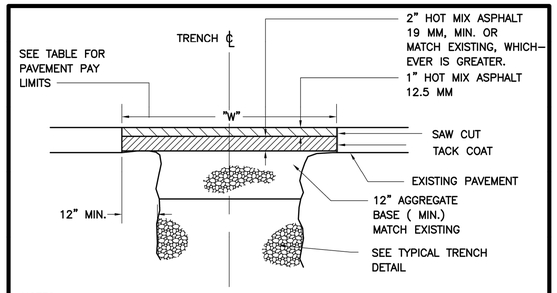

NOTES:
1. INITIAL TRENCH PAVING MAY BE USED AS THE BASE COURSE FOR FINAL PAVING IF IN GOOD REPAIR.
2. FOR STATE ROADS PAVEMENT THICKNESS SHALL BE 2 1/2" HOT MIX ASPHALT, 19mm MIN OR MATCH EXISTING WHICHEVER IS GREATER, AND 1 1/2" HOT MIX ASPHALT 12.5mm, MIN.

PAVEMENT PAY LIMITS	
PIPE I.D.	"W" (FOR 0' – 10' DEEP)
6" – 15"	7'–0"
16" – 21"	8'–0"

"W" SHALL BE INCREASED BY 1'–0" FOR TRENCHES 10' – 15', AND BY 2'–0" FOR TRENCHES 15' – 20' DEEP.

FINAL TRENCH PAVING (WITHOUT OVERLAY)

WATERFORD UTILITY COMMISSION
TOWN OF WATERFORD, CT
STANDARD DETAILS

DETAIL: 38
DATE: JAN 2006

G:\dwgs\10232H\DETAILS\DETAIL38.dwg, 12/28/2005 8:27:37 AM, jdw

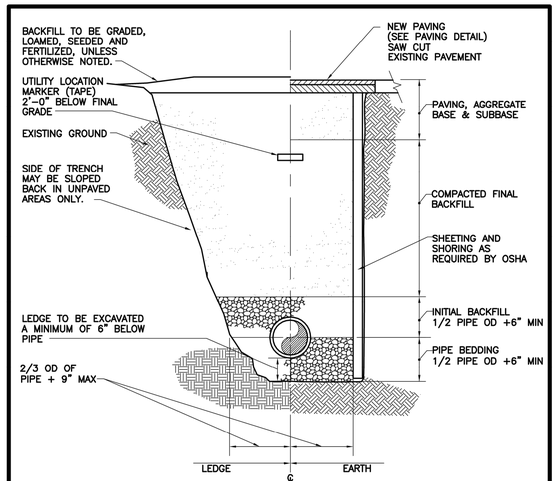

NOTES:
1. ALL EXCAVATION MUST MEET OSHA STANDARDS
2. INSTALL 3 FOOT LONG IMPERVIOUS MATERIAL DAM IN BEDDING/INITIAL BACKFILL MATERIAL EVERY 100' TO PREVENT TRENCH GROUND WATER FROM BEING CHANNELED ALONG BEDDING/INITIAL BACKFILL.
3. SEE SPECIFICATIONS FOR BEDDING AND BACKFILL REQUIREMENTS.

PIPE TRENCH DETAIL

NTS

WATERFORD UTILITY COMMISSION
TOWN OF WATERFORD, CT
STANDARD DETAILS

DETAIL: 3
DATE: JAN 2006

G:\dwgs\10232H\DETAILS\DETAIL03.dwg, 12/27/2005 2:09:42 PM, jdw

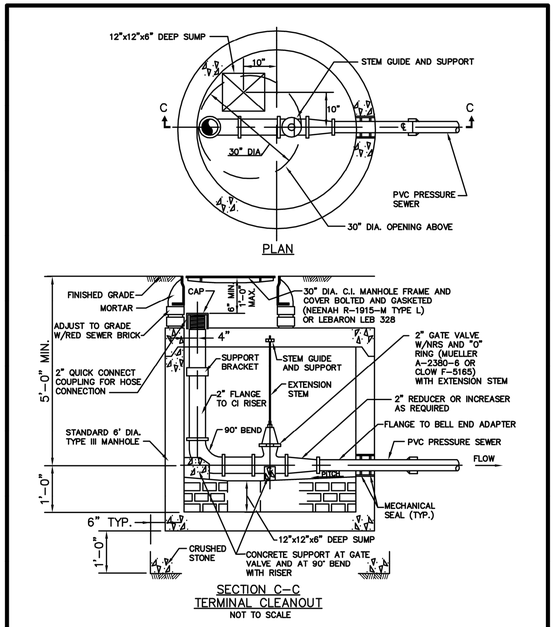

WATERFORD UTILITY COMMISSION
TOWN OF WATERFORD, CT
STANDARD DETAILS

DETAIL: 29
DATE: JAN 2006

G:\dwgs\10232H\DETAILS\DETAIL29.dwg, 12/27/2005 4:18:40 PM, jdw

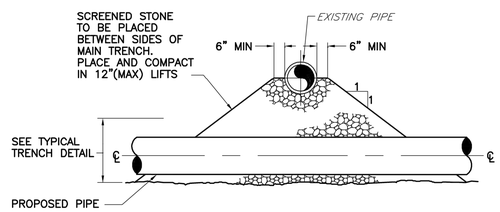

NOTE:
JOINTS ON EACH PIPE TO BE AS FAR FROM INTERSECTION AS POSSIBLE

PIPE CROSSING DETAIL

WATERFORD UTILITY COMMISSION
TOWN OF WATERFORD, CT
STANDARD DETAILS

DETAIL: 7
DATE: JAN 2006

G:\dwgs\10232H\DETAILS\DETAIL07.dwg, 12/27/2005 2:32:36 PM, jdw

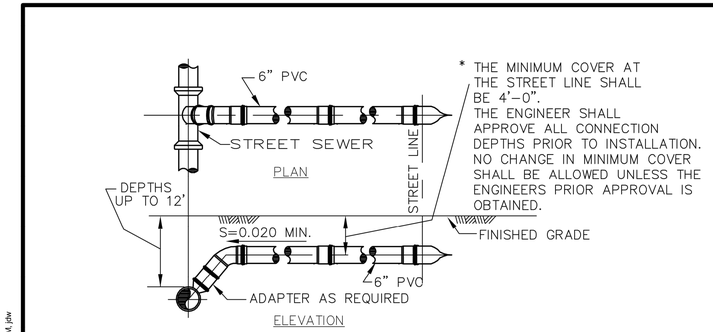

TYPE A HOUSE CONNECTION

NOT TO SCALE

WATERFORD UTILITY COMMISSION
TOWN OF WATERFORD, CT
STANDARD DETAILS

DETAIL: 26
DATE: JAN 2006

G:\dwgs\10232H\DETAILS\DETAIL26.dwg, 12/27/2005 4:12:01 PM, jdw

PLAN PREPARED BY:
INDIGO LAND DESIGN, LLC
JOSEPH VREN, P.E.
CT REG. NO. 21090
OLD SAYBROOK, CT 06475
40 ELM STREET, 2ND FLOOR
PHONE: (860) 388-9343
WEB: INDIGO-LAND.COM

NOT FOR CONSTRUCTION UNTIL THIS NOTE IS REMOVED

#	DATE	DESCRIPTION	BY
2	7/23/2024	REVISIONS PER TOWN COMMENTS, MISC.	RG
1	7/11/2024	REVISIONS PER TOWN COMMENTS, MISC.	RG

CONSTRUCTION DETAILS (SANITARY SEWER SYSTEM)

PREPARED FOR 1721, LLC
430 MOHEGAN AVENUE PARKWAY & 23B OLD NORWICH ROAD
TAX MAP 76 LOTS 10164 & 5600
WATERFORD, CONNECTICUT

DATE: MAY 21, 2024
SCALE: AS NOTED
DRAWN BY: CO, MA, RG, RM
CHECKED BY: JW
DWG. NO.: CD-5
SHEET NO.: 12 of 13
JOB. NO.: 2023-922

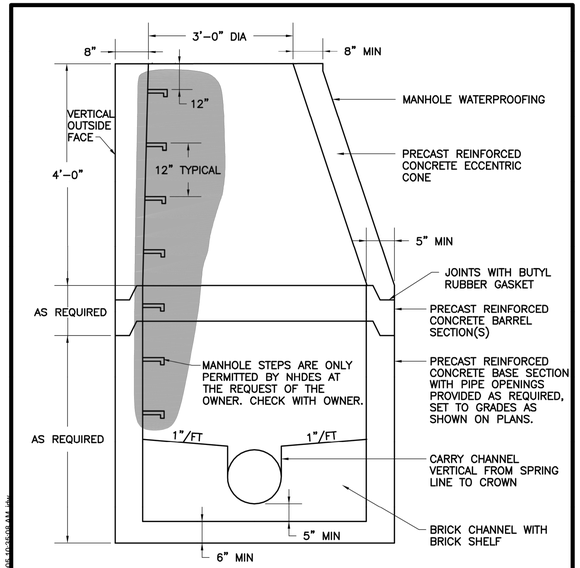

TYPICAL 4-FT MANHOLE

NTS

NOTES:

1. MANHOLE CHANNELS REQUIRING CHANGE IN ALIGNMENT ARE TO BE BUILT ON A SMOOTH RADIUS. IF SIDE PIPES ENTER CHANNEL, SHAPE TO RECEIVE ADDED SIDE FLOW.
2. USE FLAT SLAB TOP MANHOLE WHEN THE DIFFERENCE BETWEEN INVERT AND RIM IS LESS THAN 6'-0" AND WHEN MANHOLE DIAMETER IS GREATER THAN 4'-0".

WATERFORD UTILITY COMMISSION
TOWN OF WATERFORD, CT
STANDARD DETAILS

DETAIL: 11
DATE: JAN 2006

G:\dwgs\10220HDETAILS\DETAIL11.dwg, 12/27/2005 4:54:22 PM, jdw

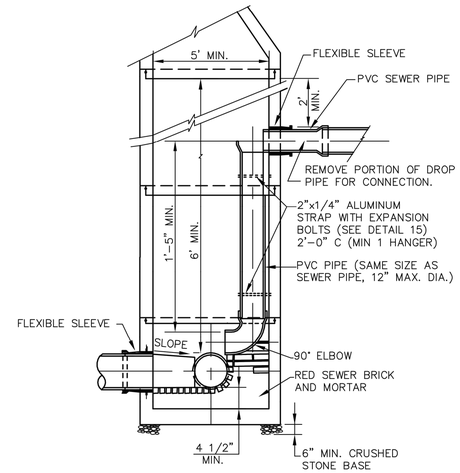

ALTERNATE DROP CONNECTION 12" AND SMALLER

NOT TO SCALE

(MAY BE USED BY CONTRACTOR IN LIEU OF TYPICAL DROP CONNECTION 12" AND SMALLER, AT NO ADDITIONAL COST TO THE OWNER)

WATERFORD UTILITY COMMISSION
TOWN OF WATERFORD, CT
STANDARD DETAILS

DETAIL: 19
DATE: JAN 2006

G:\dwgs\10220HDETAILS\DETAIL19.dwg, 12/27/2005 4:00:20 PM, jdw

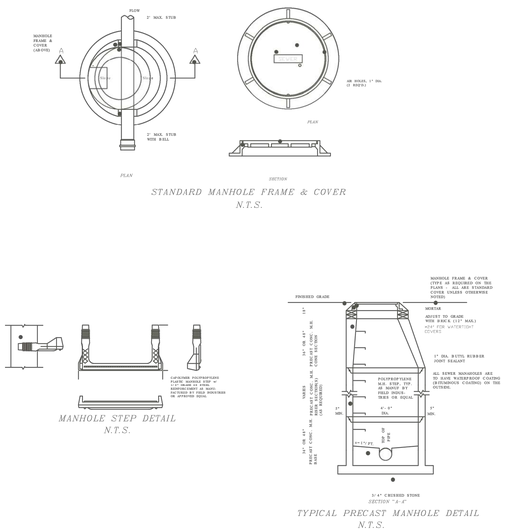

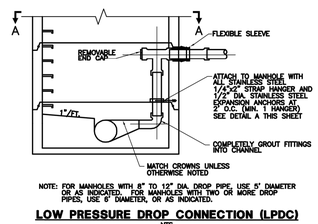

NOTE: FOR MANHOLES WITH 8" TO 10" DIA. DROP PIPE, USE 5" DIAMETER OR AS INDICATED. FOR MANHOLES WITH TWO OR MORE DROP PIPES, USE 6" DIAMETER, OR AS INDICATED.

LOW PRESSURE DROP CONNECTION (LPDC)

NTS

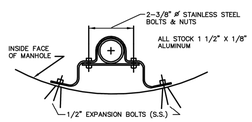

DETAIL A

NOT TO SCALE

(1 CLAMP ASSY. EA. 3' VERT. DROP)
(MINIMUM OF 1 PER DROP CONNECTION)

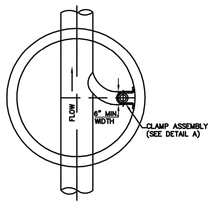

SECTION A–A

WATERFORD UTILITY COMMISSION
TOWN OF WATERFORD, CT
STANDARD DETAILS

DETAIL: 18
DATE: JAN 2006

G:\dwgs\10220HDETAILS\DETAIL18.dwg, 12/27/2005 3:54:32 PM, jdw

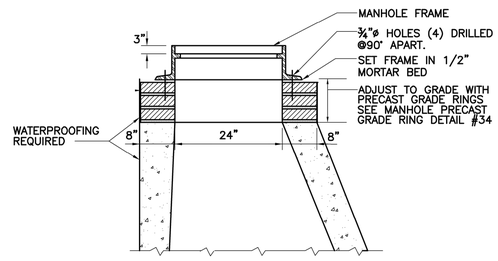

MANHOLE FRAME INSTALLATION

NTS

NOTES:

1. FOR MANHOLE FRAMES LOCATED IN WOODED AREAS, FINAL RIM ELEVATION IS TO BE SET AT 2' ABOVE GRADE, UNLESS OTHERWISE DIRECTED BY THE UTILITY COMMISSION.

WATERFORD UTILITY COMMISSION
TOWN OF WATERFORD, CT
STANDARD DETAILS

DETAIL: 13
DATE: JAN 2006

G:\dwgs\10220HDETAILS\DETAIL13.dwg, 12/27/2005 3:23:37 PM, jdw

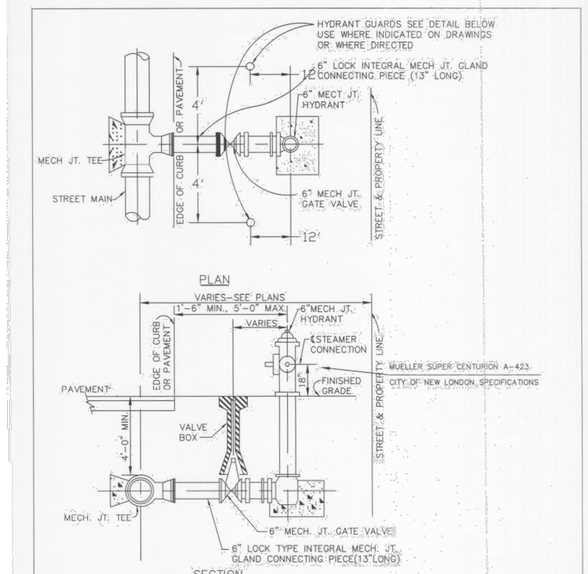

TYPICAL HYDRANT INSTALLATION

NOT TO SCALE

WATERFORD UTILITY COMMISSION
TOWN OF WATERFORD, CT
STANDARD DETAILS

DETAIL: HYDRANT
DATE: 2013

PLAN PREPARED BY:
INDIGO LAND DESIGN, LLC
JOSEPH VREN, P.E.
CT REG. NO. 21090
40 ELM STREET, 2ND FLOOR
OLD SAYBROOK, CT 06475
PHONE: (860) 388-9343
WEB: INDIGO-LAND.COM

NOT FOR CONSTRUCTION UNTIL THIS NOTE IS REMOVED

#	DATE	DESCRIPTION	
2	7/23/2024	REVISIONS PER TOWN COMMENTS, MISC.	RG
1	7/11/2024	REVISIONS PER TOWN COMMENTS, MISC.	RG

CONSTRUCTION DETAILS (SANITARY SEWER SYSTEM)

PREPARED FOR 1721, LLC
430 MOHEGAN AVENUE PARKWAY & 23B OLD NORWICH ROAD
TAX MAP 76 LOTS 10164 & 5600
WATERFORD, CONNECTICUT

DATE: MAY 21, 2024
SCALE: AS NOTED
DRAWN BY: CO, MA, RG, RM
CHECKED BY: JW
DWG. NO.: CD-6
SHEET NO.: 13 of 13
JOB. NO.: 2023-922